Company: Joyoung International Trading Co.,Limited
Atten： Smiling
Mobile/WhatsApp/Wechat:+86 18050035902
Email: info@htechplc.com
Website: https://www.joyoungintl.com/

Bailey® infi 90®

Instruction

Control I/O Slave Module
(IMCIS02)

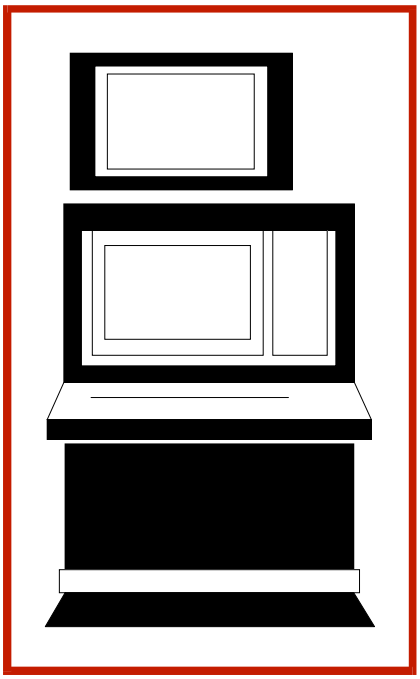

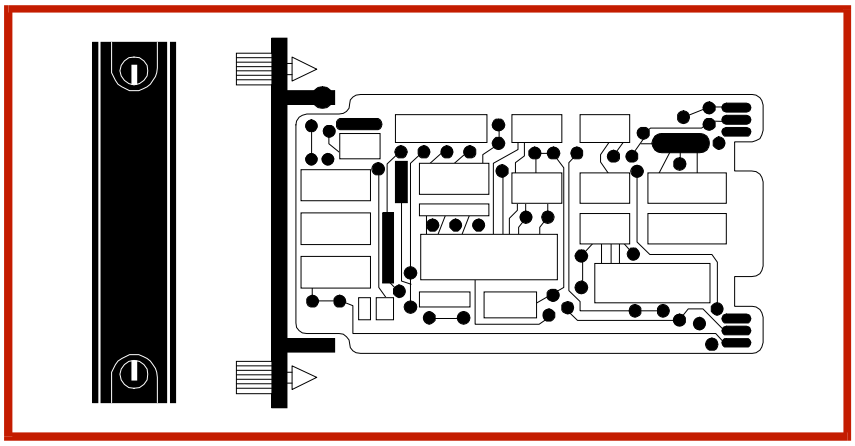

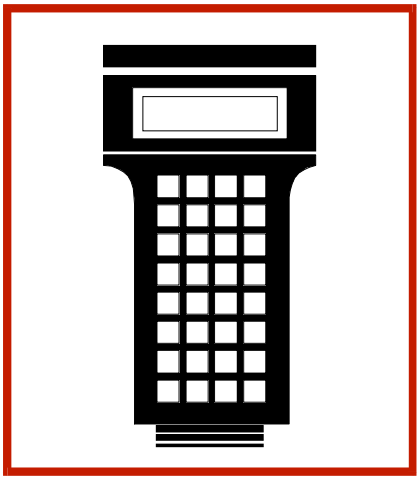

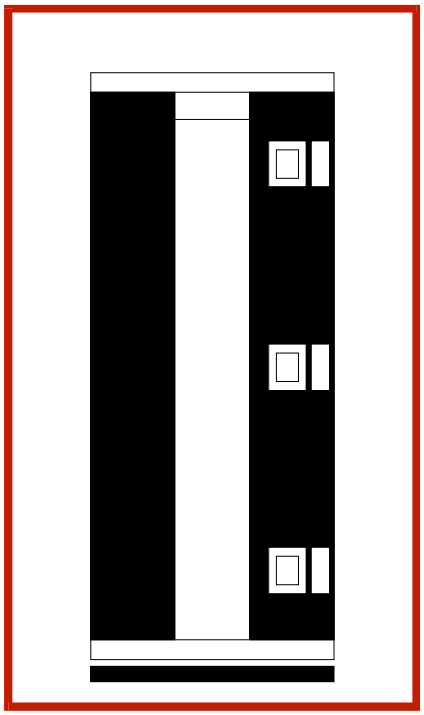

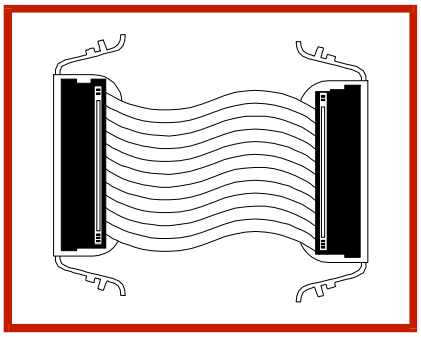

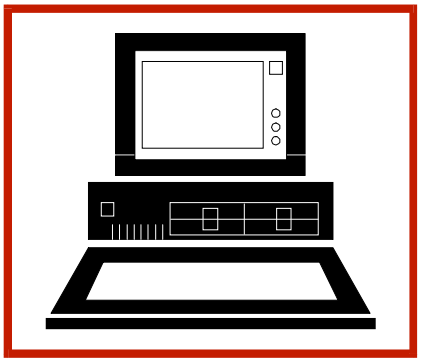

WARNING notices as used in this instruction apply to hazards or unsafe practices that could result in personal injury or death.

CAUTION notices apply to hazards or unsafe practices that could result in property damage.

NOTES highlight procedures and contain information that assists the operator in understanding the information contained in this instruction.

WARNING

INSTRUCTION MANUALS

DO NOT INSTALL, MAINTAIN, OR OPERATE THIS EQUIPMENT WITHOUT READING, UNDERSTANDING, AND FOLLOWING THE PROPER **Elsag Bailey** INSTRUCTIONS AND MANUALS; OTHERWISE, INJURY OR DAMAGE MAY RESULT.

RADIO FREQUENCY INTERFERENCE

MOST ELECTRONIC EQUIPMENT IS INFLUENCED BY RADIO FREQUENCY INTERFERENCE (RFI). CAUTION SHOULD BE EXERCISED WITH REGARD TO THE USE OF PORTABLE COMMUNICATIONS EQUIPMENT IN THE AREA AROUND SUCH EQUIPMENT. PRUDENT PRACTICE DICTATES THAT SIGNS SHOULD BE POSTED IN THE VICINITY OF THE EQUIPMENT CAUTIONING AGAINST THE USE OF PORTABLE COMMUNICATIONS EQUIPMENT.

POSSIBLE PROCESS UPSETS

MAINTENANCE MUST BE PERFORMED ONLY BY QUALIFIED PERSONNEL AND ONLY AFTER SECURING EQUIPMENT CONTROLLED BY THIS PRODUCT. ADJUSTING OR REMOVING THIS PRODUCT WHILE IT IS IN THE SYSTEM MAY UPSET THE PROCESS BEING CONTROLLED. SOME PROCESS UPSETS MAY CAUSE INJURY OR DAMAGE.

AVERTISSEMENT

MANUELS D'OPÉRATION

NE PAS METTRE EN PLACE, RÉPARER OU FAIRE FONCTIONNER L'ÉQUIPEMENT SANS AVOIR LU, COMPRIS ET SUIVI LES INSTRUCTIONS RÉGLEMENTAIRES DE **Elsag Bailey**. TOUTE NÉGLIGENCE À CET ÉGARD POURRAIT ÊTRE UNE CAUSE D'ACCIDENT OU DE DÉFAILLANCE DU MATÉRIEL.

PERTURBATIONS PAR FRÉQUENCE RADIO

LA PLUPART DES ÉQUIPEMENTS ÉLECTRONIQUES SONT SENSIBLES AUX PERTURBATIONS PAR FRÉQUENCE RADIO. DES PRÉCAUTIONS DEVRONT ÊTRE PRISES LORS DE L'UTILISATION DU MATÉRIEL DE COMMUNICATION PORTATIF. LA PRUDENCE EXIGE QUE LES PRÉCAUTIONS À PRENDRE DANS CE CAS SOIENT SIGNALÉES AUX ENDROITS VOULUS DANS VOTRE USINE.

PERTURBATIONS DU PROCÉDÉ

L'ENTRETIEN DOIT ÊTRE ASSURÉ PAR UNE PERSONNE QUALIFIÉE EN CONSIDÉRANT L'ASPECT SÉCURITAIRE DES ÉQUIPEMENTS CONTRÔLÉS PAR CE PRODUIT. L'AJUSTEMENT ET/OU L'EXTRACTION DE CE PRODUIT PEUT OCCASIONNER DES À-COUPS AU PROCÉDÉ CONTRÔLE LORSQU'IL EST INSÉRÉ DANS UNE SYSTÈME ACTIF. CES À-COUPS PEUVENT ÉGALEMENT OCCASIONNER DES BLESSURES OU DES DOMMAGES MATÉREILS.

NOTICE

The information contained in this document is subject to change without notice.

Elsag Bailey, its affiliates, employees, and agents, and the authors and contributors to this publication specifically disclaim all liabilities and warranties, express and implied (including warranties of merchantability and fitness for a particular purpose), for the accuracy, currency, completeness, and/or reliability of the information contained herein and/or for the fitness for any particular use and/or for the performance of any material and/or equipment selected in whole or part with the user of/or in reliance upon information contained herein. Selection of materials and/or equipment is at the sole risk of the user of this publication.

This document contains proprietary information of Elsag Bailey, Elsag Bailey Process Automation, and is issued in strict confidence. Its use, or reproduction for use, for the reverse engineering, development or manufacture of hardware or software described herein is prohibited. No part of this document may be photocopied or reproduced without the prior written consent of Elsag Bailey.

Preface

The Control I/O Slave module (IMCIS02) brings process field signals into the Infi 90 Process Management System, and outputs Infi 90 signals to the process. Master modules use this I/O to monitor and control a process.

This instruction explains the slave module features, specifications and operation. It details the procedures to follow to set-up and install a Control I/O Slave (CIS) module. It explains troubleshooting, maintenance and module replacement procedures.

The system engineer or technician using the CIS should read and understand this instruction before installing and operating the slave

List of Effective Pages

Total number of pages in this manual is 43, consisting of the following:

Page No.	Change Date
Preface	Original
List of Effective Pages	Original
iii through vi	Original
1-1 through 1-8	Original
2-1 through 2-7	Original
3-1 through 3-8	Original
4-1 through 4-2	Original
5-1 through 5-3	Original
6-1	Original
7-1	Original
8-1	Original
A-1 through A-4	Original
B-1 through B-2	Original

When an update is received, insert the latest changed pages and dispose of the superseded pages.

NOTE: On an update page, the changed text or table is indicated by a vertical bar in the outer margin of the page adjacent to the changed area. A changed figure is indicated by a vertical bar in the outer margin next to the figure caption. The date the update was prepared will appear beside the page number.

Safety Summary

GENERAL WARNINGS	**Equipment Environment** All components, whether in transportation, operation or storage must be in a noncorrosive environment. **Electrical Shock Hazard During Maintenance** Disconnect power or take precautions to ensure that contact with energized parts is avoided when servicing. **Special Handling** This module uses Electrostatic Sensitive Devices (ESD).

SPECIFIC WARNINGS	Disconnect power before installing dipshunts for slave modules on the MMU back plane (slave expander bus). Failure to do so could result in severe or fatal shock. (p. 3-6)

Sommaire de Sécurité

AVERTISSEMENTS D'ORDRE GÉNÉRAL	**Environment de l'equipement** Nes pas soumettre les composantes a une atmosphere corrosive lors du transport, de l'entreposage ou de l'utilisation. **Risques de chocs electriques lor de l'entretien** S'assurer de debrancher l'alimentation ou de prende les precautions necessaires a eviter tout contact avec des composants sours tension lors de l'entretien. **Precautions de Manutention** Ce module contient des composantes sensibles aux decharges electro-statiques.

AVERTISSEMENTS D'ORDRE SPÉCIFIQUE	Couper l'alimentation avant d'installer les dipshunts sur la plaque arriere du chassis de montage de modules (MMU). Toute negligence a cet egard constitue un risque de choc pouvant entrainer des blessures graves, voire moretiles. (p. 3-6)

Table of Contents

Page

SECTION 1 - INTRODUCTION 1-1
- OVERVIEW 1-1
- INTENDED USER 1-1
- MODULE DESCRIPTION 1-1
- FEATURES 1-2
- INSTRUCTION CONTENT 1-3
- HOW TO USE THIS MANUAL 1-3
- GLOSSARY OF TERMS AND ABBREVIATIONS 1-4
- REFERENCE DOCUMENTS 1-5
- NOMENCLATURE 1-5
- SPECIFICATIONS 1-6

SECTION 2 - DESCRIPTION AND OPERATION 2-1
- INTRODUCTION 2-1
- ANALOG I/O 2-2
  - Analog Inputs 2-2
  - Analog Input Circuit Calibration 2-3
  - Analog Outputs 2-3
- DIGITAL I/O 2-4
  - Digital Inputs 2-4
  - Digital Outputs 2-5
  - Digital I/O Buffer 2-5
- I/O CIRCUIT CONNECTIONS 2-5
- SLAVE EXPANDER BUS 2-5
- UNIVERSAL SLAVE EXPANDER BUS INTERFACE 2-6
- MODULE DATA 2-6
  - I/O Data 2-6
  - Status Data 2-7
- LOGIC POWER 2-7
- BUS FAULT TIMER 2-7
- STATUS LED INDICATOR 2-7

SECTION 3 - INSTALLATION 3-1
- INTRODUCTION 3-1
- SPECIAL HANDLING 3-1
- UNPACKING AND INSPECTION 3-1
- SETUP/PHYSICAL INSTALLATION 3-2
  - Slave Address Selection Switch (S1) 3-2
  - Analog Output Default Switch (S2) 3-4
  - Analog Output Mode Switch (S3) 3-5
  - Digital Input Jumper Settings 3-5
  - Termination Unit/Module Configuration 3-6
  - Physical Installation 3-6
- WIRING CONNECTIONS AND CABLING 3-7
  - Wiring 3-7
  - Cable Connections 3-7
- FUSING 3-7
- PRE-OPERATING ADJUSTMENTS 3-7

Table of Contents (continued)

Page

SECTION 4 - OPERATING PROCEDURES 4-1
INTRODUCTION 4-1
MODULE STATUS INDICATOR 4-1
START-UP PROCEDURES 4-2

SECTION 5 - TROUBLESHOOTING 5-1
INTRODUCTION 5-1
ERROR INDICATIONS AND CORRECTIVE ACTION 5-1
Status LED 5-1
Master Module Errors 5-2
MODULE PIN CONNECTIONS 5-3

SECTION 6 - MAINTENANCE 6-1
INTRODUCTION 6-1
MAINTENANCE SCHEDULE 6-1

SECTION 7 - REPAIR/REPLACEMENT PROCEDURES 7-1
INTRODUCTION 7-1
MODULE REPAIR/REPLACEMENT PROCEDURES 7-1

SECTION 8 - SUPPORT SERVICES 8-1
INTRODUCTION 8-1
REPLACEMENT PARTS AND ORDERING INFORMATION 8-1
TRAINING 8-1
TECHNICAL DOCUMENTATION 8-1

APPENDIX A - TERMINATION UNIT (NTCS02) CONFIGURATION A-1
INTRODUCTION A-1

APPENDIX B - TERMINATION MODULE (NICS01) CONFIGURATION B-1
INTRODUCTION B-1

List of Figures

No.	Title	Page
1-1.	Infi 90 Communication Levels	1-2
2-1.	Control I/O Slave Module Block Diagram	2-1
2-2.	IMCIS02 Analog Input and Output Circuits	2-2
2-3.	IMCIS02 Digital Input and Output Circuits	2-4
3-1.	Control I/O Slave Module	3-2
3-2.	Address Select Switch (S1)	3-2
3-3.	Analog Output Default Switch (S2)	3-4
3-4.	Analog Output Mode Switch (S3)	3-5
3-5.	IMCIS02 Cable Connections and Termination	3-8
4-1.	IMCIS02 Front Panel	4-1
A-1.	NTCS02 Dipshunt for Digital Inputs	A-1
A-2.	NTCS02 Dipshunt for Analog Outputs	A-2
A-3.	NTCS02 Dipshunt for Analog Inputs	A-2
A-4.	NTCS02 Terminal Assignments	A-4
B-1.	NICS01 Terminal Assignments	B-2

List of Tables

No.	Title	Page
3-1.	Address Switch Settings (S1)	3-3
3-2.	Analog Output Default Switch (S2) Settings	3-4
3-3.	Analog Output Mode Switch (S3) Settings	3-5
3-4.	Digital Input Jumper Settings	3-6
4-1.	IMCIS02 Status LED Indicator	4-1
5-1.	Status LED Indications and Correction Actions	5-1
5-2.	P1 Power Pin Connections	5-3
5-3.	P2 Expander Bus Connections	5-3
5-4.	P3 I/O Pin Connections	5-3
6-1.	Maintenance Schedule	6-1
A-1.	NTCS02 Dipshunt Configuration	A-3
B-1.	NICS01 Dipswitch Configuration	B-1

SECTION 1 - INTRODUCTION

OVERVIEW

The Control I/O Slave module (IMCIS02) brings four analog and three digital process field signals into the Infi 90 system for processing and monitoring. It outputs four digital and two analog signals for process control. The Control I/O Slave (CIS) module is an interface between the process and the Infi 90 Process Management System. Master modules perform the control functions; slave modules provide the I/O to the master modules.

This manual explains the purpose, operation and maintenance of the slave module. It addresses handling precautions and installation procedures. Figure 1-1 illustrates the Infi 90 communication levels and the position of the CIS module within these levels.

INTENDED USER

System engineers and technicians should read this manual before installing and operating the CIS module. A module ***SHOULD NOT*** be put into operation until this instruction is read and understood. You can refer to the Table of Contents to find specific information after the module is operating.

MODULE DESCRIPTION

The CIS consists of a single printed circuit board (PCB) that occupies one slot in a Module Mounting Unit (MMU). A dipswitch on the PCB configures each of the analog outputs; jumpers configure each of the digital inputs. Each analog input is configured on its respective Termination Unit (TU) or Termination Module (TM).

Two captive screws on the faceplate secure the module to the MMU. A front panel LED indicates the module status.

The slave module has three connection points for external signals and power (P1, P2 and P3). P1 connects to logic power that drives the module circuits (refer to Table 5-2). P2 connects it to the slave expander bus to communicate with a Multi-Function Processor (MFP) module (refer to Table 5-3). The digital and analog signals are input and output through connector P3 using a cable connected to a TU/TM (refer to Table 5-4). The terminal blocks (physical connection points) for field wiring are on the TU/TM.

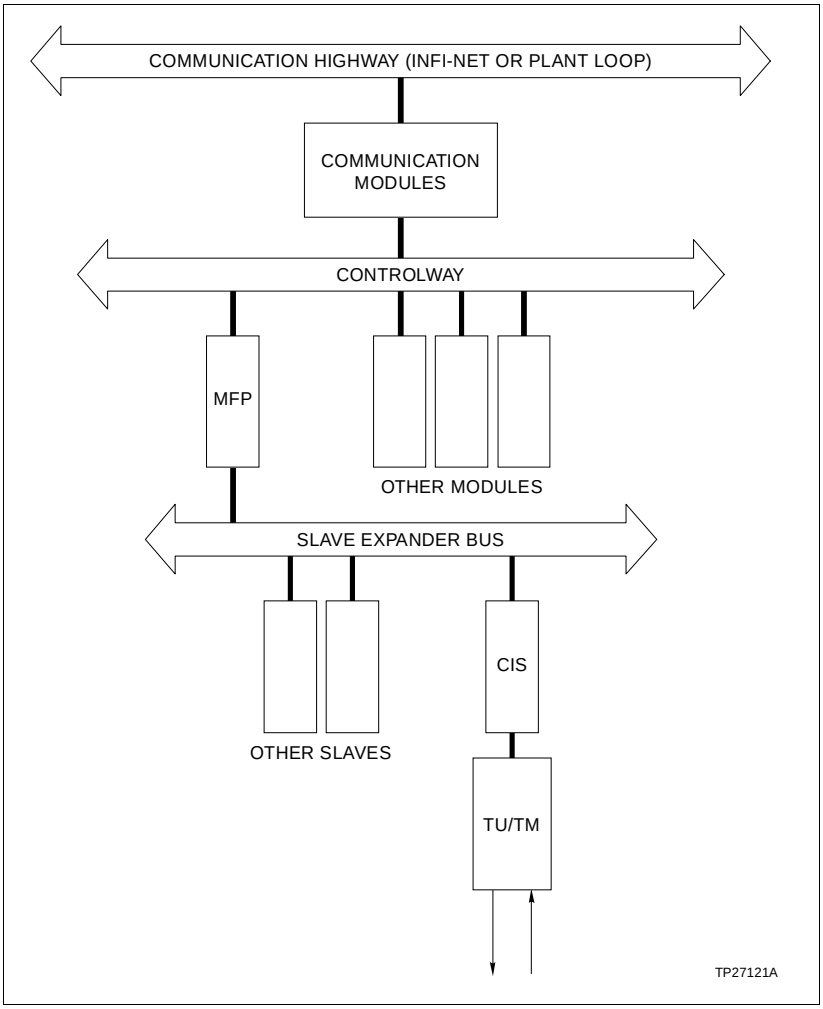

Figure 1-1. Infi 90 Communication Levels

FEATURES

The modular design of the CIS, as with all Infi 90 modules, allows for flexibility when you are creating a process management strategy. It brings analog and digital signals into the system and outputs analog and digital signals to the process.

The CIS accepts digital signals of 24 VDC, 125 VDC and 120 VAC. Individual voltage and response time jumpers on the module configure each input. Selectable response times (fast or slow) for DC inputs allow the Infi 90 system to compensate for process field device debounce time. It outputs 24 VDC digital signals that can sink 250 mA.

It accepts analog signals of 1 to 5 VDC (single ended or differential); its respective TU/TM converts a 4 to 20 mA current

to a voltage that is sent to the CIS. The analog output mode is selectable; a dipswitch selects current or voltage mode for each analog output depending on the process requirements.

The front panel LED provides a visual indication of the module status to aid in system test and diagnosis. You can remove or install a CIS without powering the system down.

INSTRUCTION CONTENT

This manual consists of eight sections. ***Introduction*** is an overview of the CIS module: Features, description and specifications. ***Description and Operation*** explains the module operation, and input and output circuitry. ***Installation*** describes precautions to observe when handling CIS modules, and setup procedures required before module operation. This section discusses switch and jumper settings, and installation procedures. ***Operating Procedures*** explains the front panel indicator and start-up of the slave module. ***Troubleshooting*** describes the error indications and corrective actions to take. ***Maintenance*** has a maintenance schedule for the slave module. ***Repair/Replacement Procedures*** details the procedures to replace a slave module. ***Support Services*** provides replacement part ordering information. It explains other areas of support that Bailey Controls provides.

HOW TO USE THIS MANUAL

Read this manual through in sequence. It is important to become familiar with the entire contents of this manual before using the CIS. The manual is organized in sections to enable you to find specific information quickly.

1. Read and do the steps in Section 3.

2. Read Section 4 before powering up the module.

3. Refer to Section 5 if a problem occurs.

4. Refer to Section 6 for scheduled maintenance requirements.

5. Use the Section 8 section when ordering replacement parts.

GLOSSARY OF TERMS AND ABBREVIATIONS

Term	Definition
Analog	A continuous time signal with an infinite number of values.
CTT	Configuration and Tuning Terminal; hand held module that provides a local means for system configuration, tuning and diagnostics.
Configuration	A control strategy with function blocks.
Controlway	A redundant peer-to-peer communication path for point data transfer between intelligent modules within a process control unit.
Digital	A discrete signal having only two states: on or off.
Dipshunt	Dual in-line package with shorting bars.
Dipswitch	A dual in-line package that contains single pole switches.
EWS	Engineering Work Station; an integrated hardware and software personal computer system for configuring and monitoring Infi 90 modules.
Function Code	An algorithm which defines specific functions. These functions are linked together to form the control strategy.
LED	Light Emitting Diode; the module front panel indicator that shows status and error messages.
LSB	Least Significant Bit; the bit of a binary number that carries the least numerical weight.
Master Module	One of a series of controller modules designed to direct field processes through a slave module. The multi-function processor is an example.
MFP	Multi-Function Processor Module; a multiple-loop controller with data acquisition and information processing capabilities.
MMU	Module Mounting Unit; a card cage that provides electrical and communication support for Infi 90 modules.
MSB	Most Significant Bit; the bit of a binary number that carries the most numerical weight.
OIS	Operator Interface Station; integrated operator console with data acquisition and reporting capabilities. It provides a window into the process for flexible control and monitoring.
PCU	Process Control Unit; rack type industrial cabinet that contains master, slave and communication modules, and their communication paths.

GLOSSARY OF TERMS AND ABBREVIATIONS (continued)

Term	Definition
Slave Expander Bus	Parallel address/data bus between the master module and the slave.
TM	Termination Module; provides input/output connection between plant equipment and the Infi 90 process modules. The termination module slides into a slot in the termination mounting unit.
TU	Termination Unit; provides input/output connection between plant equipment and the Infi 90 process modules. The termination unit is a flat circuit board for panel mounting.

REFERENCE DOCUMENTS

Document Number	Document
I-E96-201	Multi-Function Processor (IMMFP01)
I-E96-202	Multi-Function Processor (IMMFP02)
I-E93-911	Termination Unit Manual
I-E96-100	Operator Interface Station
I-E93-916	Engineering Work Station
I-E92-501-2	Configuration and Tuning Terminal
I-E93-900-20	Function Code Application Manual

NOMENCLATURE

The following modules and equipment can be used with a CIS:

Nomenclature	Hardware
IMMFP01/02	Multi-Function Processor Module
NTCS02	Termination Unit, Control I/O
NICS01	Termination Module, Control I/O
NKTU01	Cable, Termination Unit
NKTU02	Cable, Termination Module
NKTM01	Cable, Termination Module

GLOSSARY OF TERMS AND ABBREVIATIONS (continued)

SPECIFICATIONS

POWER REQUIREMENTS	
Voltage	+5 VDC (±5%) +15 VDC (-2.5%, +5%) -15 VDC (-5%, +2.5%) +24 VDC (±10%)(from termination unit/termination module)
Current (maximum)	332 mA (+5 VDC) 35 mA (+15 VDC) 30 mA (-15 VDC) 50 mA (+24VDC)
Dissipation	1.65 W @ +5 VDC 525 mW @ +15 VDC 450 mW @ -15 VDC 1.20 W @ +24 VDC
DIGITAL I/O	
Digital Inputs (3)	Optically isolated
Current (typical)	4.5 mA @ 24 VDC 5.0 mA @ 125 VDC 7.0 mA @ 120 VAC rms @ 60 Hz
Voltage	24 VDC (±10%) 125 VDC (±10%) 120 VAC (±10%)
Turn-On Voltage (minimum)	
24 VDC	21.4 VDC
125 VDC	95.0 VDC
120 VAC	85.0 VAC
Turn-Off Voltage (maximum)	
24 VDC	12 VDC
125 VDC	60 VDC
120 VAC	42 VAC
Maximum Input Current at Minimum Turn-On	
24 VDC	3 mA @ 21.4 VDC
125 VDC	3 mA @ 95.0 VDC
120 VAC	5 mA @ 85.0 VAC 60 Hz
Off Leakage Current (maximum)	
24 VDC	10 µA (@ Vin ≤ 12 VDC)
125 VDC	10 µA (@ Vin ≤ 60 VDC)
120 VAC	1.6 mA (@ Vin ≤ 42 VAC 60 Hz)
Response Time	DC “Fast” - 1.5 ms DC “Slow” - 17 ms

SPECIFICATIONS (continued)

DIGITAL I/O (continued)	
Digital Outputs (4)	Open collector, optically isolated
Off Output Voltage	$V_{I/O}$ Nominal 24 VDC
On Output Voltage	2.4 VDC Max
Off Output Current	10 µA Max
On Output Current	250 mA Max
ANALOG I/O	
Analog Inputs (4)	1 - 5 VDC (differential)
TU/TM configured to accept:	Powered or unpowered current (4 - 20 mA) Single-ended or differential voltage (1 - 5 VDC)
Input Impedance	>1 Mohm
Common Mode Voltage	±10 VDC
Normal Mode Rejection (minimum)	76 db @ 60 Hz
Common Mode Rejection (minimum)	90 db @ 60 Hz
Analog Outputs (2)	4 - 20 mA or 1 - 5 VDC
Output Load	
Current Mode (maximum)	600 ohm, 600 millihenries
Voltage Mode (minimum)	>1 Kohm
A/D Resolution	12 bits for analog inputs
D/A Resolution	10 bits for analog outputs
Analog Accuracy	
Input @ 25° C (77° F), Standard Conditions	
Terminal Based Linearity	±0.03% of Full Scale Range (FSR)
Repeatability	±0.03% of FSR
Deadband	±0.03% of FSR
Accuracy	±0.10% of FSR
Output @ 25° C (77° F), Standard Conditions	
Terminal Based Linearity	±0.10% of FSR
Repeatability	±0.05% of FSR
Accuracy	±0.15% of FSR (voltage mode) ±0.25% of FSR (current mode)
Temperature Effect (0-70° C)	±0.002% of FSR/degrees C
Input Cross Talk (channel to channel)	50 db (minimum) @ 25° C (77° F) 68 db (typical) @ 25° C (77° F)

SPECIFICATIONS (continued)

SPECIFICATIONS (continued)

MOUNTING	
Occupies one slot in standard Infi 90 Module Mounting Unit.	
ENVIRONMENTAL	
Ambient Temperature	0° to 70° C (32° to 158° F)
Relative Humidity	0% to 95% up to 55° C (131° F) (non-condensing) 0% to 45% up to 70° C (158° F) (non-condensing)
Altitude	Sea Level to 3 Km (1.86 miles)
Air Quality	Non-corrosive
CERTIFICATION	
CSA certified for use as process control equipment in an ordinary (non-hazardous) location.	

SPECIFICATIONS SUBJECT TO CHANGE WITHOUT NOTICE

SECTION 2 - DESCRIPTION AND OPERATION

INTRODUCTION

This section explains the inputs, outputs, logic power and connections for the Control I/O Slave (CIS) module. The CIS is a process field I/O interface for a Multi-Function Processor (MFP) or Multi-Function Controller (MFC) module. The slave module circuitry:

1. Performs analog to digital (A/D) conversion. It changes analog inputs to digital values the MFP can process.

2. Performs digital to analog (D/A) conversion. It changes the MFP digital values to analog voltage or current signals to control process field devices.

3. Accepts digital field inputs, and isolates the module circuitry from the process.

4. Outputs digital signals to process field devices, and isolates the module circuitry from the process.

The MFP communicates with its slave modules on a 12-line slave expander bus as shown in Figure 1-1. It references the address set by the slave address dipswitch (S1). Figure 2-1 is a block diagram of the CIS.

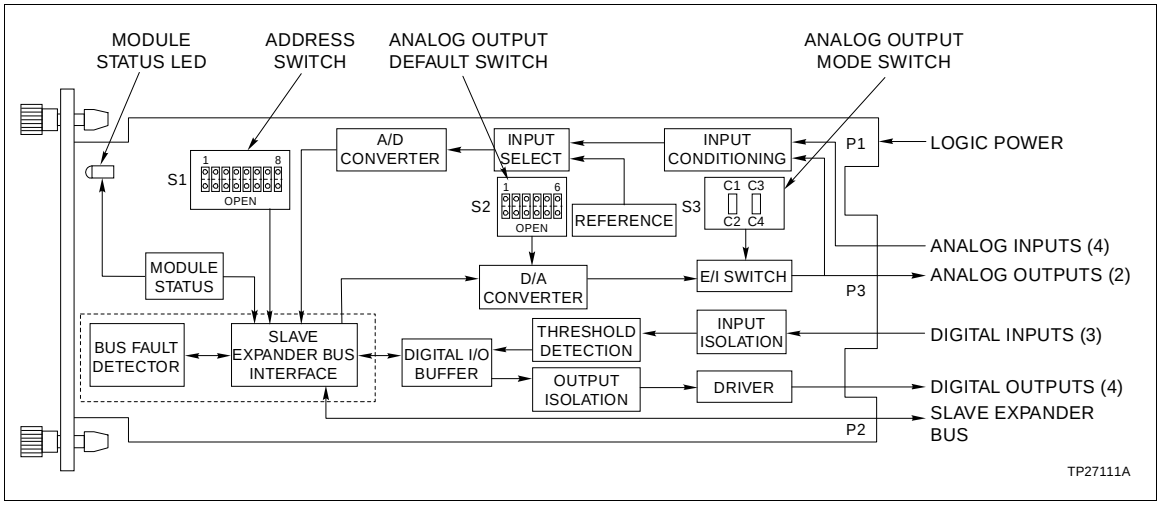

Figure 2-1. Control I/O Slave Module Block Diagram

ANALOG I/O

The CIS can input four separate analog signals (1 to 5 VDC), and output two separate analog signals (1 to 5 VDC, 4 to 20 mA). The module accepts analog inputs that are either single ended or differential voltages. It allows for a common mode (inputs change together proportionally) differential voltage of ±10 VDC. The CIS output mode is selectable: current or voltage. Figure 2-2 shows the analog input and output circuits.

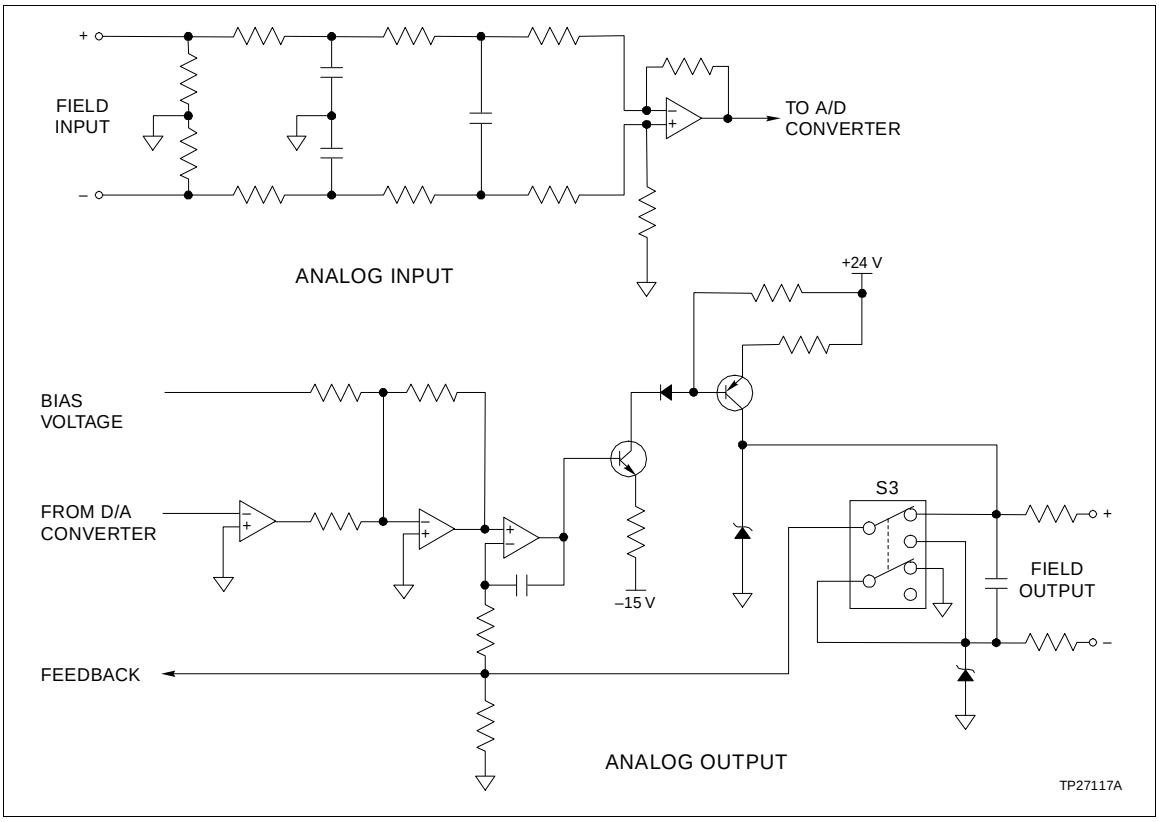

Figure 2-2. IMCIS02 Analog Input and Output Circuits

Analog Inputs

The input conditioning block consists of two pole input filters that reduce input signal noise. They provide 76 db of normal mode rejection (differential change) and 90 db of common mode rejection for the differential inputs.

The CIS uses analog voltage inputs only. Its respective Termination Unit (TU) or Termination Module (TM) is configurable for current or voltage inputs; resistors on the TU/TM convert analog current inputs to voltages that are sent to the CIS.

The input select block consists of an analog multiplexer and an inverting difference amplifier. The multiplexer selects one of the four inputs or the reference block inputs (calibration voltages). The difference amplifier converts the selected input to a single ended signal.

The A/D converter block circuits change the input signal to a 12-bit value that is sent to the slave expander bus interface. This value is an analog count that corresponds to the input voltage. Nominal input range is 1 to 5 VDC, however, it allows for a 0.75 to 5.25 VDC input range which is ±6.25 percent of the nominal input range span (4 VDC).

Analog Input Circuit Calibration

The reference block generates accurate 1 VDC and 5 VDC signals. The CIS does not have potentiometers to adjust zero offset and gain for the A/D converter circuits. Instead, the MFP reads the reference voltages once per minute to calibrate the 0 percent (1 VDC) and 100 percent (5 VDC) points; this calibration automatically corrects the measured values. It is performed continuously to correct for drift and temperature variations.

Analog Outputs

The D/A converter block is two separate D/A converters. Each D/A converts a 10-bit digital value (analog count) from the MFP to an analog output (1 to 5 VDC). To check module circuit integrity, the outputs are fed back to the analog input section. The feedback values (analog output digital values) are compared to the values that were sent to the analog output section to test the output quality. This tests for an output circuit failure or an open loop between the master module and slave module.

The analog output default switch (S2) sets the output values during system start-up or *time-out* (refer to ***BUS FAULT TIMER*** in this section). The analog outputs will go to 0 percent or 100 percent output, or they will hold their current values depending on the setting of S2. Section 3 explains how to set S2.

The analog output mode switch (S3) sets the type of output, either current or voltage. If current mode is selected, the E/I circuits on the CIS convert the voltage from the D/A converter to a current output. Section 3 explains how to set S3.

DIGITAL I/O

The CIS can input three separate digital signals and output four separate digital signals. Digital inputs are voltages of 24 VDC, 125 VDC or 120 VAC. These voltages indicate an energized (ON) field device; a 0 volt input indicates a de-energized (OFF) field device. The CIS digital outputs can switch 24 VDC at 250mA. Figure 2-3 shows the digital input and output circuits.

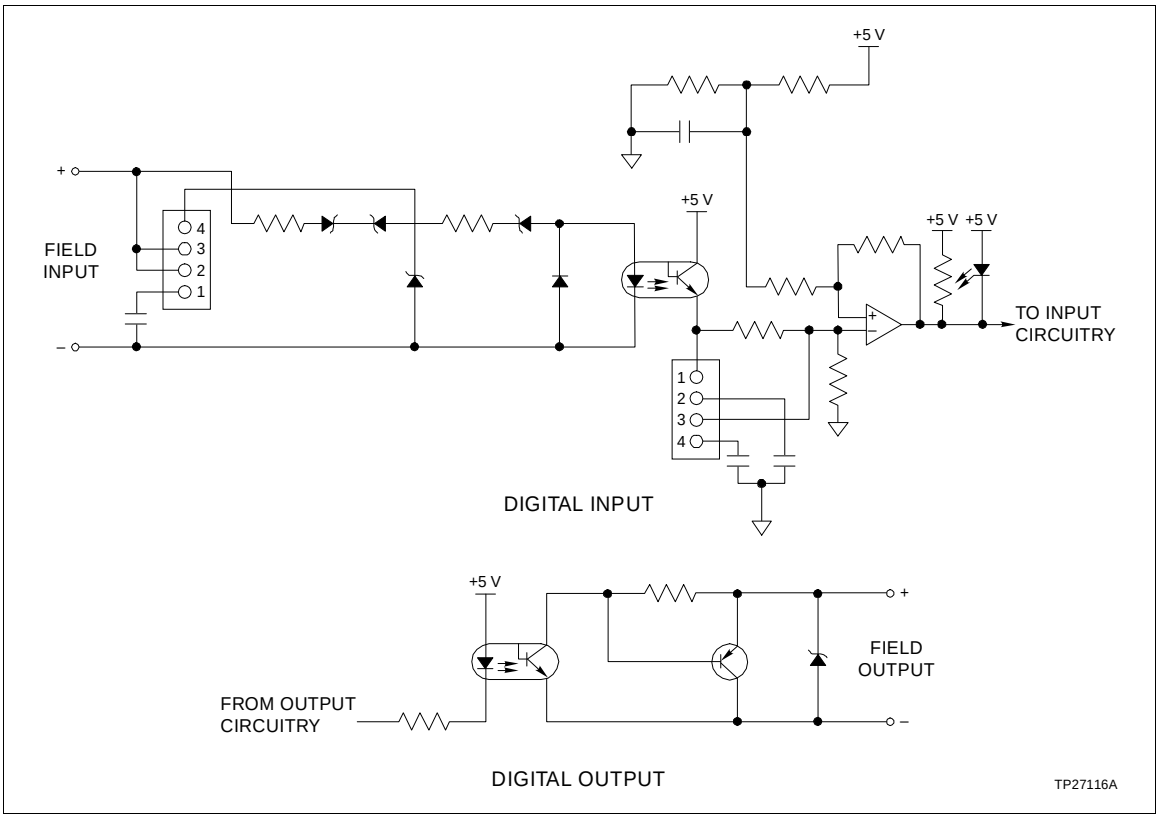

Figure 2-3. IMCIS02 Digital Input and Output Circuits

The CIS has two possible propagation (speed) choices for DC inputs to allow for contact debounce time: a slow setting (17 millisecond response time) and a fast setting (1.5 millisecond response time). Jumpers on the CIS select the voltage level and response time for each input. Section 3 explains the jumper connections.

Digital Inputs

Current limiters and optocouplers in the isolation block isolate the three field inputs from the module circuitry. The threshold detection block circuits test the input voltage to determine if it

is at the proper voltage level to indicate an energized (closed) or de-energized (open) state for the field device. These values are sent to the digital I/O buffer block. Jumpers on the CIS select the threshold detection voltage level.

Digital Outputs

The output isolation block consists of optocouplers to isolate the control logic circuits from the process. Four open collector transistors that can sink a 250 mA load make up the driver block.

Digital I/O Buffer

The digital I/O buffer block is a buffer and register that hold the values of the digital inputs and outputs. The slave expander bus interface writes digital data to the register for output by the driver block circuits, and reads the digital input values from the buffer.

I/O CIRCUIT CONNECTIONS

The I/O signals connect to the 30-pin card edge connector P3 of the CIS using a termination cable from a TU/TM. It also supplies +24 VDC power to operate the analog output circuits.

SLAVE EXPANDER BUS

The Infi 90 slave expander bus is a high speed synchronous parallel bus. It provides a communication path between master modules and slave modules. The master module provides the control functions and the slave module provides the I/O functions. The P2 card edge connector of the slave and master module connect to the bus.

The slave expander bus is twelve parallel signal lines located on the Module Mounting Unit (MMU) backplane. A 12-position dipshunt placed in a connection socket on the MMU backplane connects the bus between the master and slave modules. Cable assemblies can extend the bus to six MMUs.

A master module and its slaves form an individual subsystem within a Process Control Unit (PCU). The slave expander bus between master/slave subsystems must be separated. Leaving a dipshunt socket empty or not connecting the MMUs with cables separates them.

UNIVERSAL SLAVE EXPANDER BUS INTERFACE

The CIS uses a custom gate array to perform the slave expander bus interface function. All the control logic and communication protocol are built into an integrated circuit (IC). This IC provides the following functions:

- Address comparison and detection.
- Function code latching and decoding.
- Read strobe generation.
- Data line filtering of bus signals.
- On-board bus drivers.

MODULE DATA

Function Code (FC) 79 in the MFP configuration accesses the CIS on the slave expander bus. It also allows the MFP to automatically read input data or status data from the slave module, and write output data to it. This data is output by buffer circuits to the slave expander bus interface (see Figure 2-1). The slave address in FC 79 must be the same as the address set on the slave address dipswitch (S1).

I/O Data

I/O data is analog input, digital input, and digital and analog output readback values that the MFP reads from the CIS. It is also analog and digital output values that the MFP sends to the CIS. The MFP uses this data to monitor and control a process, and verify CIS operation.

Analog input data consists of analog counts from the A/D converter. Analog counts are digital values that correspond to analog signals; the A/D performs the conversion. The signals converted include the four analog inputs, two reference voltages (1 VDC and 5 VDC) and two analog output readback values. The MFP reads each of these count values once every execution cycle. Each analog input count value corresponds to an analog input voltage. Reference voltage values are read by the MFP to verify A/D converter integrity. It reads the two analog output values to adjust the analog outputs and check for output circuit failures.

The MFP reads a one byte value that consists of digital output readback values and digital input values. The digital input values indicate the digital input states. Each bit corresponds to one input; the bit value reflects the state of that input,

either open (logic 0) or closed (logic 1). Digital output readback data reflects the output states. The MFP uses this data to verify that the outputs are correct. Each bit corresponds to one output; a logic 1 indicates an active (ON) output, a logic 0 indicates an inactive (OFF) output.

Status Data

Status data is an 8-bit data value that identifies the slave module and indicates the default values set by the analog output default dipswitch (S2). The MFP reads the identification bits (four MSB) to verify the slave expander bus communication integrity and MFP configuration. It reads the default bits (four LSB) to determine the default states set for the analog outputs in the event of a *time-out.*

LOGIC POWER

Logic power (+5 VDC and ±15 VDC) drives the CIS circuits. It connects through the top 12-pin card edge connector (P1) shown in Figure 2-1. P3 supplies +24 VDC to operate the analog output circuits.

BUS FAULT TIMER

The bus fault timer is a one-shot timer that is reset by the slave expander bus clock; the MFP generates the bus clock. If the bus clock stops (indicating a MFP error), the bus fault timer *times out* in 10 milliseconds. This will disable the digital outputs and set the analog outputs to their default values (set by dipswitches S2 and S3). A red front panel status LED indicates a bus fault (*time-out*).

STATUS LED INDICATOR

A front panel module status LED indicator shows the operating state of the CIS. Circuits on the CIS determine the module status and light the LED. Section 4 explains the indications and Section 5 explains corrective actions to take.

SECTION 3 - INSTALLATION

INTRODUCTION

This section explains what you must do before you put the Control I/O Slave module (IMCIS02) into operation. Do not proceed with operation until you read, understand and do the steps in the order in which they appear.

NOTE: Refer to Product Instruction I-E93-911 for termination device wiring instructions.

SPECIAL HANDLING

NOTE: Always use Bailey's Field Static Kit (P/N 1948385A2 - consists of wrist strap, ground cord assembly, alligator clip) when working with modules. The kit is designed to connect a technician and the static dissipative work surface to the same ground point to prevent damage to the modules by electrostatic discharge.

The Control I/O Slave (CIS) module uses electrostatic sensitive devices. Follow Steps 1 through 4 when handling:

1. Keep the module in its special anti-static bag until you are ready to install it in the system. Save the bag for future use.

2. Ground the anti-static bag before opening.

3. Verify that all devices connected to the module are properly grounded before using them.

4. Avoid touching the circuitry when handling the module.

UNPACKING AND INSPECTION

1. Examine the hardware immediately to verify that it has not been damaged in transit.

2. Notify the nearest Bailey Controls Sales Office of any such damage.

3. File a claim for any damage with the transportation company that handled the shipment.

4. Use the original packing material and container to store the hardware.

5. Store the hardware in an environment of good air quality, free from temperature and moisture extremes.

SETUP/PHYSICAL INSTALLATION

Prior to installation, you must set the module dipswitches and install jumpers to configure the I/O. You must configure the Termination Unit (TU) or Termination Module (TM) to accept the field device signals and output the CIS signals to the process.

Slave Address Selection Switch (S1)

The CIS can have one of 64 addresses (address 0 to 63) on the slave expander bus. This address uniquely identifies the slave to the Multi-Function Processor (MFP) and must be the same as the address set in the MFP configuration (Function Code 79 specification 1).

The address is set by the eight position address dipswitch (S1) shown in Figure 3-1. The six right switch positions (3 through 8) of S1 set the six bit CIS address. Positions 1 and 2 are not used and must remain in the closed position (see Figure 3-2). Table 3-1 is a binary address conversion table for setting S1.

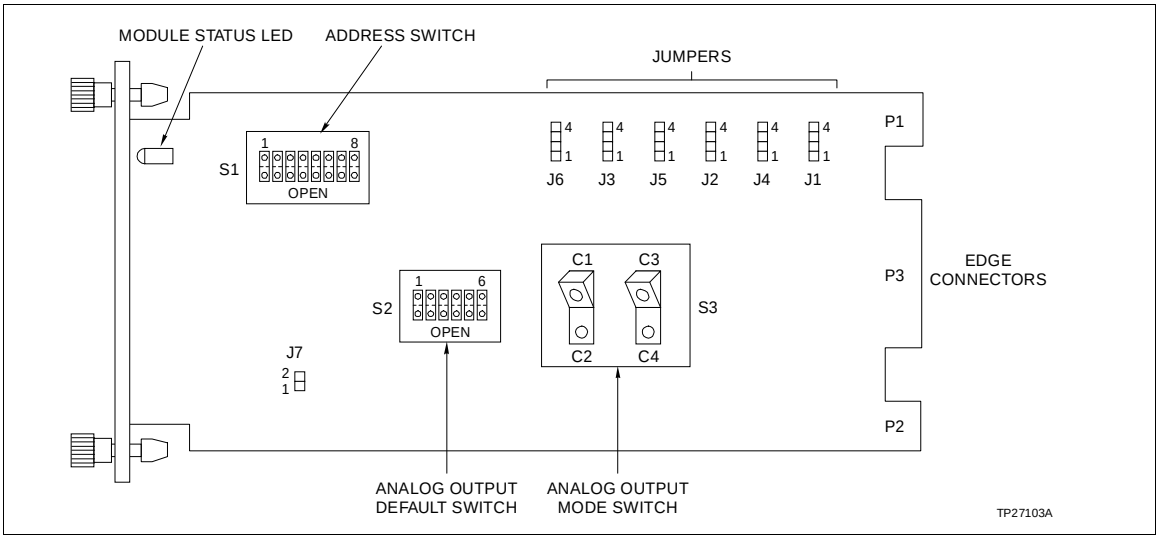

Figure 3-1. Control I/O Slave Module

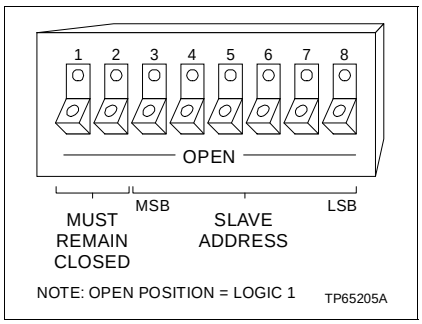

Figure 3-2. Address Select Switch (S1)

Table 3-1. Address Switch Settings (S1)

Addr	MSB 3	4	5	6	7	LSB 8	Addr	MSB 3	4	5	6	7	LSB 8
0	0	0	0	0	0	0	32	1	0	0	0	0	0
1	0	0	0	0	0	1	33	1	0	0	0	0	1
2	0	0	0	0	1	0	34	1	0	0	0	1	0
3	0	0	0	0	1	1	35	1	0	0	0	1	1
4	0	0	0	1	0	0	36	1	0	0	1	0	0
5	0	0	0	1	0	1	37	1	0	0	1	0	1
6	0	0	0	1	1	0	38	1	0	0	1	1	0
7	0	0	0	1	1	1	39	1	0	0	1	1	1
8	0	0	1	0	0	0	40	1	0	1	0	0	0
9	0	0	1	0	0	1	41	1	0	1	0	0	1
10	0	0	1	0	1	0	42	1	0	1	0	1	0
11	0	0	1	0	1	1	43	1	0	1	0	1	1
12	0	0	1	1	0	0	44	1	0	1	1	0	0
13	0	0	1	1	0	1	45	1	0	1	1	0	1
14	0	0	1	1	1	0	46	1	0	1	1	1	0
15	0	0	1	1	1	1	47	1	0	1	1	1	1
16	0	1	0	0	0	0	48	1	1	0	0	0	0
17	0	1	0	0	0	1	49	1	1	0	0	0	1
18	0	1	0	0	1	0	50	1	1	0	0	1	0
19	0	1	0	0	1	1	51	1	1	0	0	1	1
20	0	1	0	1	0	0	52	1	1	0	1	0	0
21	0	1	0	1	0	1	53	1	1	0	1	0	1
22	0	1	0	1	1	0	54	1	1	0	1	1	0
23	0	1	0	1	1	1	55	1	1	0	1	1	1
24	0	1	1	0	0	0	56	1	1	1	0	0	0
25	0	1	1	0	0	1	57	1	1	1	0	0	1
26	0	1	1	0	1	0	58	1	1	1	0	1	0
27	0	1	1	0	1	1	59	1	1	1	0	1	1
28	0	1	1	1	0	0	60	1	1	1	1	0	0
29	0	1	1	1	0	1	61	1	1	1	1	0	1
30	0	1	1	1	1	0	62	1	1	1	1	1	0
31	0	1	1	1	1	1	63	1	1	1	1	1	1

1 = OPEN; 0 = CLOSED

Analog Output Default Switch (S2)

The analog output default switch (S2), shown in Figure 3-1, determines the CIS analog output default values. These are the values or levels for the analog outputs during system start-up (*power up*) or bus fault error (*time-out*).

You can select either a 0 percent or 100 percent *power up* output. Selecting 0 percent will output 4 mA or 1 VDC; selecting 100 percent will output 20 mA or 5 VDC. Switch position 3 selects the value for Analog Output 1 (AO1) and position 6 selects the value for Analog Output 2 (AO2). S3 determines the mode of the output (current or voltage).

If the bus fault timer expires (*times out*), the digital outputs de-energize and the analog outputs change to the default value selected. A *time-out* occurs when the slave does not receive a clock signal from the MFP. The *time-out* options are to ***hold*** or ***go to power up state***. The outputs will stay at their current values during a *time-out* if the ***hold*** option is selected; they will change to the *power up* values (0 or 100 percent) if the ***go to power up state*** is selected. Position 2 selects the *time-out* option for AO1. Position 5 selects the *time-out* option for AO2. Section 2 explains the bus fault timer in more detail.

Switch positions 1 and 4 are not used and should be in the closed position. Figure 3-3 shows the analog output default switch (S2); refer to Table 3-2 for the switch settings. Determine the requirements for your process and set the dipswitches to the positions shown in the table.

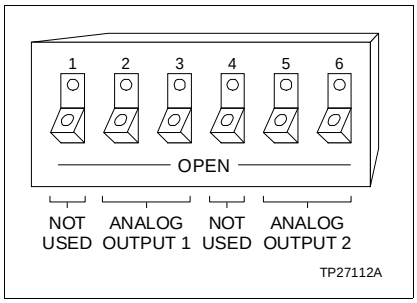

Figure 3-3. Analog Output Default Switch (S2)

Table 3-2. Analog Output Default Switch (S2) Settings

Analog Output	Time Out Option			Power-Up State		
	Switch	Go To Power-Up	Hold	Switch	0%	100%
1	2	CLOSED	OPEN	3	CLOSED	OPEN
2	5	CLOSED	OPEN	6	CLOSED	OPEN

Analog Output Mode Switch (S3)

The analog output mode switch (S3), shown in Figure 3-1, selects the mode of each analog output. The mode can be set to current (4 to 20 mA) or voltage (1 to 5 VDC).

Set the switch to position C1 for a current output at AO1 or position C2 for a voltage output at AO1. Set the switch to position C3 for a current output at AO2 or position C4 for a voltage output at AO2. Figure 3-4 shows the analog output mode switch (S3). Refer to Table 3-3 for the switch settings.

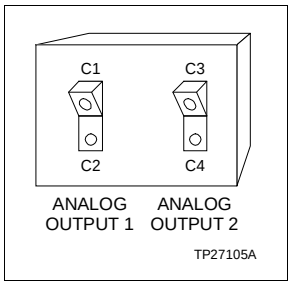

Figure 3-4. Analog Output Mode Switch (S3)

Table 3-3. Analog Output Mode Switch (S3) Settings

Analog Output	Switch Position	
	Current Mode	Voltage Mode
1	C1	C2
2	C3	C4

Digital Input Jumper Settings

Jumpers J-1 through J-3 set the input voltage levels and jumpers J-4 through J-6 set the DC voltage response time. The DC inputs have two propagation (speed) choices: a slow setting (17 millisecond response time) or fast setting (1.5 millisecond response time). There are four terminals at each of these jumper locations. Refer to Table 3-4 to determine the jumper settings for your application; place a jumper across the pins shown in the table. Figure 3-1 shows the location of the jumpers on the IMCIS02.

NOTE: J-7 is a clock jumper used for factory testing. The jumper is installed at the factory and must remain in place; **DO NOT** remove it. Removing it will cause the module to operate erratically.

Table 3-4. Digital Input Jumper Settings

Digital Input	Jumper (J)	120 VAC	125 VDC Slow	125 VDC Fast	24 VDC Slow	24 VDC Fast
1	1 4	1-2 1-2	2-3 2-3	2-3 3-4	3-4 2-3	3-4 3-4
2	2 5	1-2 1-2	2-3 2-3	2-3 3-4	3-4 2-3	3-4 3-4
3	3 6	1-2 1-2	2-3 2-3	2-3 3-4	3-4 2-3	3-4 3-4

Termination Unit/Module Configuration

A TU/TM connects the field device wiring to the Infi 90 system. The terminal blocks (connection points) are located on the TU/TM.

You must configure the TU/TM to accept the field inputs that are sent to the CIS module, and to output the CIS signals that are sent to the process field device. Refer to the appendices to determine the configuration for your application.

Physical Installation

NOTE: The Installation section provides instructions pertaining to the physical installation of the slave only. For complete cable and TU/TM information, refer to Termination Unit Manual I-E93-911.

The IMCIS02 module inserts into a standard Infi 90 Module Mounting Unit (MMU) and occupies one slot. To install:

1. Verify the slot assignment of the module.

WARNING	**Disconnect power before installing dipshunts for slave modules on the MMU back plane (slave expander bus). Failure to do so could result in severe or fatal shock.**
AVERTISSEMENT	**Couper l'alimentation avant d'installer les dipshunts sur la plaque arriere du chassis de montage de modules (MMU). Toute negligence a cet egard constitue un risque de choc pouvant entrainer des blessures graves, voire moretiles.**

2. Verify that a dipshunt is in the slave expander bus socket on the MMU backplane between the slave and master module.

3. Connect the hooded end of the termination cable from the TU/TM to the MMU backplane. To do this, insert the connector into the backplane slot in the same slot as the one assigned to the slave module. The latches should snap securely into place.

4. Align the module with the plastic guide rails in the MMU; gently slide the module in until the front panel is flush with the top and bottom of the MMU frame.

5. Push and turn the two captive retaining screws on the module faceplate one half turn to the latched position. It is latched when the slots on the screws are vertical and the open ends face the center of the module. (To remove the module, turn the module retaining screws to the unlatched position and gently slide it out).

WIRING CONNECTIONS AND CABLING

The CIS has three card edge connectors to supply logic power, establish slave expander bus communication and provide I/O (P1, P2, P3 respectively).

Wiring

Installing the module in the MMU connects the slave module to the logic power, necessary to drive the circuitry, at P1. It also connects P2 to the slave expander bus for communication with the MFP. P1 and P2 connection require no additional wiring or cabling.

> **NOTE:** You must install a dipshunt on the backplane of the MMU to connect the slave expander bus between the slave module and master module. Locate the modules so the bus can connect the modules or they will not communicate.

Cable Connections

The IMCIS02 uses either a NTCS02 or NICS01 for termination. See Figure 3-5 to determine the cables to use with the termination unit or module you are using.

FUSING

Fuse resistors for the analog outputs are soldered on the CIS module board. They are not intended for customer replacement.

PRE-OPERATING ADJUSTMENTS

You do not have to make any adjustments to the CIS prior to operating.

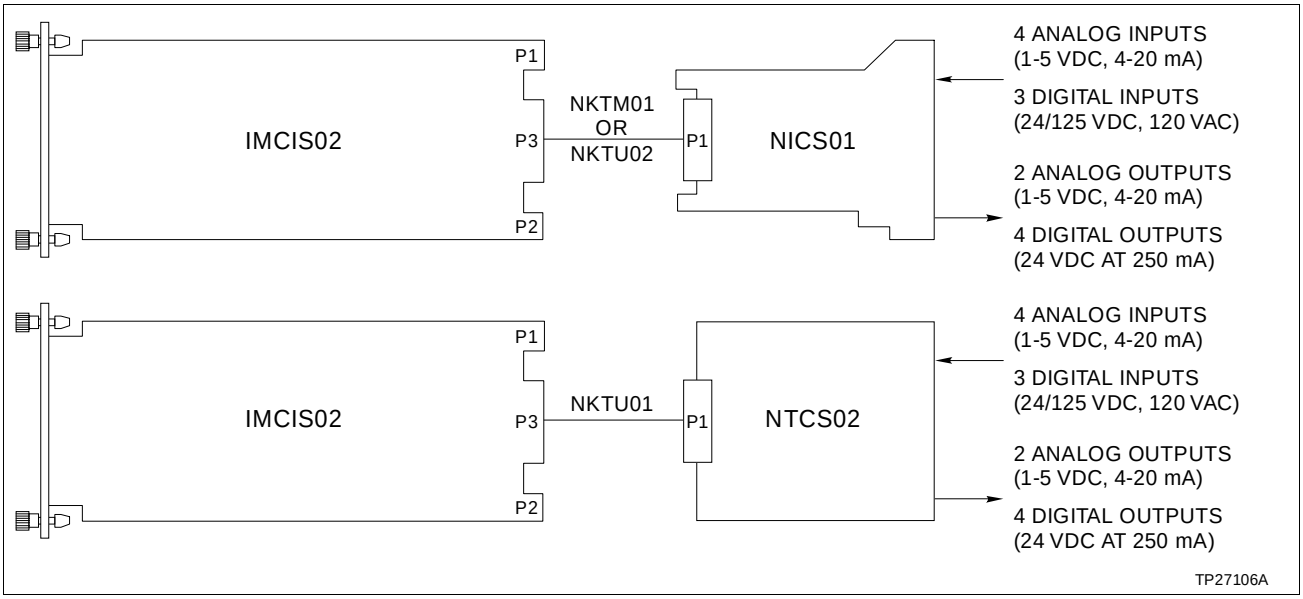

Figure 3-5. IMCIS02 Cable Connections and Termination

SECTION 4 - OPERATING PROCEDURES

INTRODUCTION

This section explains the front panel indicator and start-up procedures for the Control I/O Slave module (IMCIS02).

MODULE STATUS INDICATOR

The Control I/O Slave (CIS) module has a front panel module status LED indicator to aid in system test and diagnosis. The location of the indicator is shown in Figure 4-1. Table 4-1 explains the three states of the status LED indicator (refer to Section 5 to determine corrective actions).

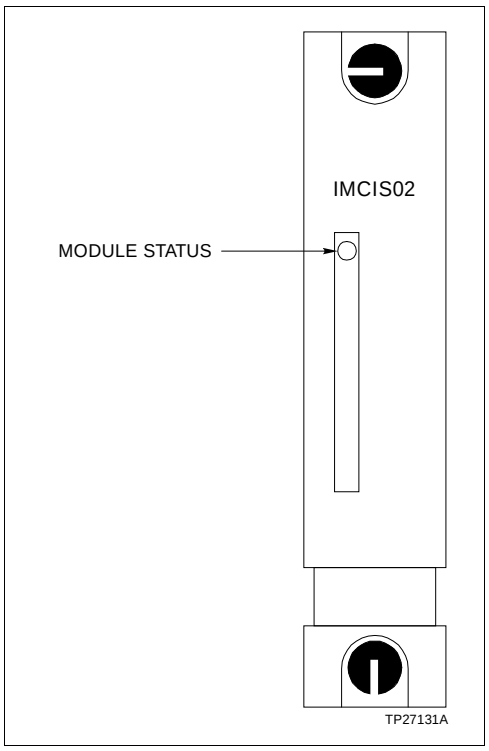

Figure 4-1. IMCIS02 Front Panel

Table 4-1. IMCIS02 Status LED Indicator

LED	Indication
Solid Green	Enabled and communicating with MFP
Off	No power or not enabled
Solid Red	Bus fault timer error (*time-out*)

START-UP PROCEDURES

The Multi-Function Processor (MFP) controls the start-up of the CIS module; it is fully automatic. Function Code (FC) 79 in the MFP configuration enables the CIS. Specification 1 (FC 79) is the slave module address. It must be the same as the address set on the address dipswitch (S1). The front panel LED (solid green) verifies that the module is enabled and communicating.

SECTION 5 - TROUBLESHOOTING

INTRODUCTION

This section explains the error indications and corrective actions for the Control I/O Slave (CIS) module.

ERROR INDICATIONS AND CORRECTIVE ACTION

You can obtain the status of the CIS through an Infi 90 operator interface (e.g., Operator Interface Station, Engineering Work Station, Configuration and Tuning Terminal) or the front panel module status LED indicator.

Status LED

The front panel status LED has three states to indicate normal operation and error conditions. Table 5-1 lists CIS status LED states, error indications, probable causes and corrective actions.

NOTE: If the corrective actions in Table 5-1 do not correct a problem with the CIS module, replace the slave module.

Table 5-1. Status LED Indications and Correction Actions

LED State	Indication	Probable Cause	Corrective Action
Solid Green	Slave module operating normally and communicating with MFP	Normal operation	No action required
Off	Slave module not enabled	Address set on S1 not the same as address in MFP configuration FC 79 spec 1	Change address on S1 to correspond with FC 79 spec 1 OR Change address in FC 79 spec 1 to correspond with S1
		Dipshunt not properly installed between MFP and slave module	Verify dipshunt is installed properly (no bent pins) in slave expander bus socket on MMU backplane between MFP and slave module
		MFP configuration is not correct	Verify FC 79 is in MFP configuration
	No power to slave module	Module not completely inserted in MMU	Verify module is completely inserted in MMU: faceplate flush with MMU and captive retaining screws latched
Red	Bus fault timer error (*time-out*)	Slave expander bus clock failure	Check MFP for proper operation
		Dipshunt not installed between MFP and slave module	Verify dipshunt is installed in the slave expander bus socket on the MMU backplane between MFP and slave module

Master Module Errors

The Multi-Function Processor (MFP) performs status checks on the CIS. An error will appear in the report function of an operator interface. Refer to the Product Instruction for the operator interface you are using for an explanation of these reports.

Function Code (FC) 79 output block N+9 in the MFP configuration is the CIS status flag (logic 0=good; logic 1=bad). You can use an operator interface to monitor this block. If the status flag is a logic 1, check the front panel module status LED and the operator interface report function to determine corrective actions.

> **NOTE:** If FC 79 specification 19 is set to 0, the MFP will *trip* when the CIS module fails or the analog input reference voltages are out of tolerance. Changing specification 19 to a 1 will allow the MFP to continue to operate if any CIS error condition exists.

Analog input reference error

The MFP generates an ANALOG INPUT REFERENCE ERROR if the CIS reference voltages (1 VDC and 5 VDC) used to calibrate the analog input zero offset and gain are not within tolerance or the analog inputs are not within CIS tolerance.

1. Check the analog inputs to verify that their voltages are within CIS specifications (1 to 5 VDC).

2. Check the analog inputs to verify that their common mode voltage is within CIS specifications (±10 VDC).

If the analog inputs are correct, replace the CIS.

Missing slave module error

The address set on address switch (S1) and in the MFP configuration must be the same. The MFP generates a MISSING SLAVE MODULE error if they do not match. Verify that the address set on S1 is the same as the address in FC 79 specification 1. If not:

1. Remove the module and change the setting of S1 to correspond with the MFP configuration (refer to the Installation section for the procedures to set an address and to install a slave module).

OR

2. Modify the address in the MFP configuration (FC 79 specification 1) to correspond with the address set on S1. Use an Infi 90 operator interface to modify the configuration (for procedures on how to modify a function code specification, refer to the Product Instruction for the operator interface you are using).

The MFP generates a MISSING SLAVE MODULE error if the slave expander bus is not connected between it and the slave module. Verify the bus connection on the MMU backplane.

If you determine the slave module is faulty, replace it with a new one. Refer to Section 7 for procedures to replace a CIS module.

MODULE PIN CONNECTIONS

The slave module has three connection points for external signals and power (P1, P2 and P3). Tables 5-2, 5-3 and 5-4 show the pin connections.

Table 5-2. P1 Power Pin Connections

Pin (P1)	Connection	Pin (P1)	Connection
1	+5 VDC	7	+15 VDC
2	+5 VDC	8	-15 VDC
3	NC	9	PFI
4	NC	10	PFI
5	Common	11	NC
6	Common	12	NC

NC = Not Connected
PFI = Power Fail Interrupt

Table 5-3. P2 Expander Bus Connections

Pin (P2)	Signal	Pin (P2)	Signal
1	Data 1	7	Data 7
2	Data 0	8	Data 6
3	Data 3	9	Clock
4	Data 2	10	Sync
5	Data 5	11	NC
6	Data 4	12	NC

NC = Not Connected

Table 5-4. P3 I/O Pin Connections

Signal	Pin(+)	Pin(-)
Digital Output 1	A	1
Digital Output 2	B	2
Digital Output 3	C	3
Digital Output 4	D	4
NC	E	5
Digital Input 1	F	6
Digital Input 2	H	7
Digital Input 3	J	8
+24 VDC	K	9
Analog Output 1	L	10
Analog Output 2	M	11
Analog Input 1	N	12
Analog Input 2	P	13
Analog Input 3	R	14
Analog Input 4	S	15

NC = Not Connected

SECTION 6 - MAINTENANCE

INTRODUCTION

The Control I/O Slave module requires limited maintenance. This section contains a maintenance schedule.

MAINTENANCE SCHEDULE

Perform the tasks in Table 6-1 at the specified intervals.

Table 6-1. Maintenance Schedule

Task	Interval
Clean and tighten all power and grounding connections	Every 6 months or during plant shut-down, whichever occurs first
Use a static safe vacuum cleaner to remove dust from: Modules Module Mounting Unit Fan Assembly Power Entry Panel	Every 6 months or during plant shut-down, whichever occurs first

SECTION 7 - REPAIR/REPLACEMENT PROCEDURES

INTRODUCTION

This section explains the replacement procedures for a Control I/O Slave (CIS) module. There are no special tools required to replace a CIS module.

MODULE REPAIR/REPLACEMENT PROCEDURES

If you determine the CIS is faulty, replace it with a new one. ***DO NOT*** try to repair the module; replacing components may affect the module performance. You can remove the module while system power is supplied. To replace a module:

1. Push and turn the two front panel captive retaining screws one half turn to unlatch the module. It is unlatched when the slots on the screws are vertical and the open end of the slots face away from the module.

2. Gently slide the module out of the MMU.

3. Configure the replacement module switch and jumper settings. Ensure they are set the same as the original module.

4. In the same slot assignment as the original module, align the replacement module with the plastic guide rails in the MMU; gently slide it in until the front panel is flush with the top and bottom of the MMU frame.

5. Push and turn the two captive retaining screws on the module faceplate one half turn to the latched position. It is latched when the slots on the screws are vertical and the open ends face the center of the module.

6. Return to normal operation.

SECTION 8 - SUPPORT SERVICES

INTRODUCTION

Bailey Controls is ready to help in the use, application and repair of its products. Contact your nearest sales office to make requests for sales, applications, installation, repair, overhaul and maintenance contract services.

REPLACEMENT PARTS AND ORDERING INFORMATION

When making repairs at your facility, order replacement parts from a Bailey sales office. Provide this information:

1. Part description, part number and quantity.

2. Model and serial numbers (if applicable).

3. Bailey instruction manual number, page number and reference figure that identifies the part.

When you order standard parts from Bailey Controls, use part numbers and descriptions from the Recommended Spare Parts Lists. You must order parts without commercial descriptions from the nearest Bailey Controls sales office.

TRAINING

Bailey Controls has a modern training facility that provides service and repair instruction. This facility is available for in-plant training of your personnel. Contact a Bailey Controls sales office for specific information and scheduling.

TECHNICAL DOCUMENTATION

You can obtain additional copies of this manual from the nearest Bailey sales office at a reasonable charge.

APPENDIX A - TERMINATION UNIT (NTCS02) CONFIGURATION

INTRODUCTION

The IMCIS02 uses a NTCS02 for termination. They handle 4 analog inputs, 2 analog outputs, 3 digital inputs and 4 digital outputs. Dipshunts on the Termination Unit (NTCS02) configure the I/O.

NOTE: There is no dipshunt socket to configure for the digital outputs on the NTCS02.

Figures A-1, A-2, and A-3 show the NTCS02 dipshunts, and the I/O signal path from the field device to the Control I/O Slave (CIS) module for a termination unit application. Refer to Table A-1 to determine the dipshunt strapping to configure your application. Figure A-4 shows the terminal assignments for the digital and analog I/O signals. Refer to this figure when connecting field wiring to the NTCS02.

NOTE: The dipshunt figures show the dipshunts ***WITHOUT*** strapping configurations. Refer to Table A-1 for the configurations.

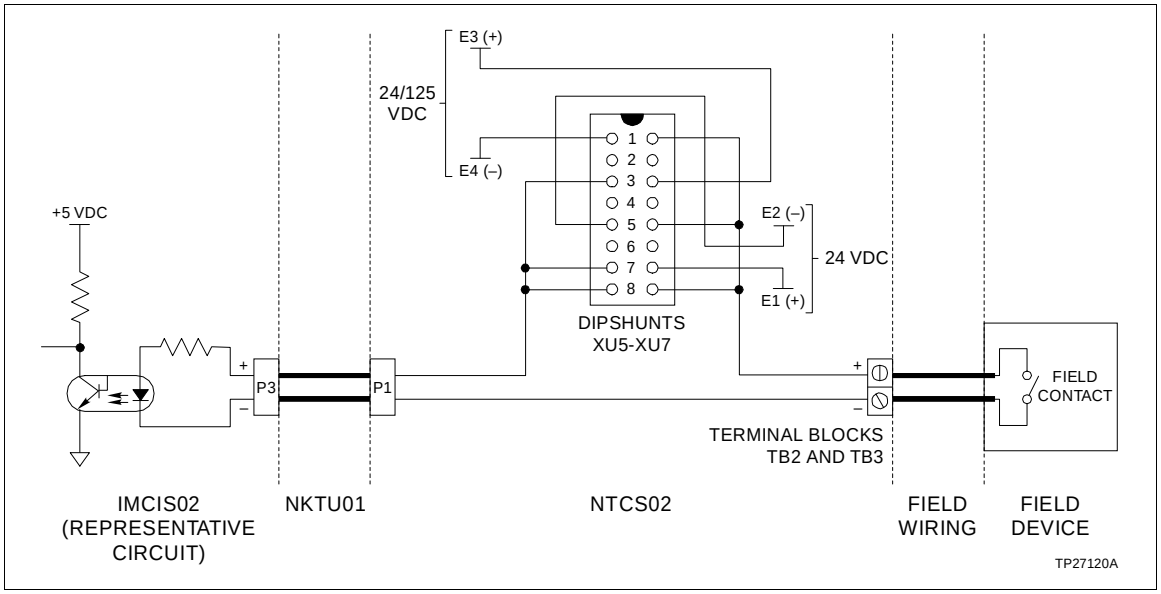

Figure A-1. NTCS02 Dipshunt for Digital Inputs

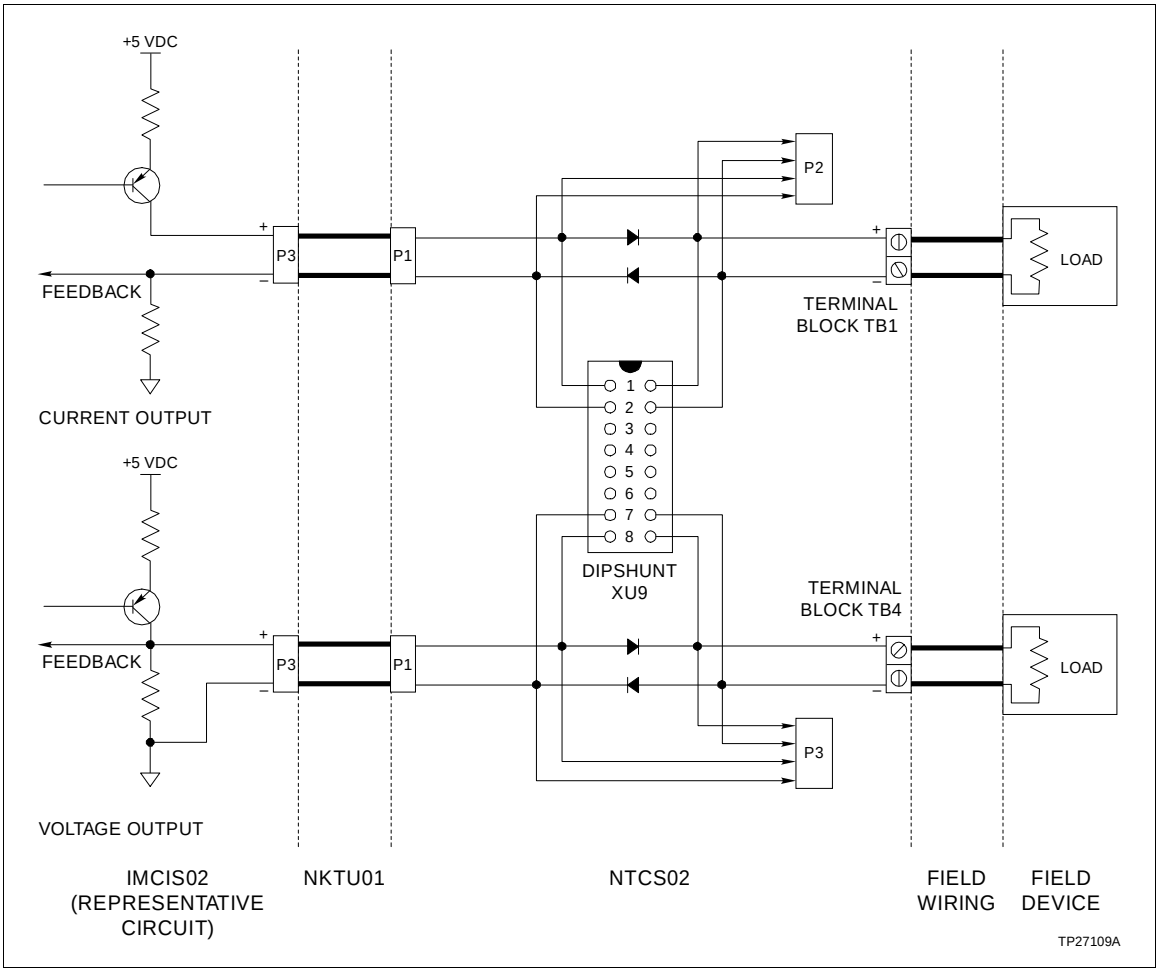

NOTE: Analog output mode (current or voltage) is dependent on the CIS configuration. The outputs can be both voltage, both current, or one voltage and one current. Figure A-2 **DOES NOT** show the dipshunt strapping configurations. Refer to Table A-1 for the configurations.

Figure A-2. NTCS02 Dipshunt for Analog Outputs

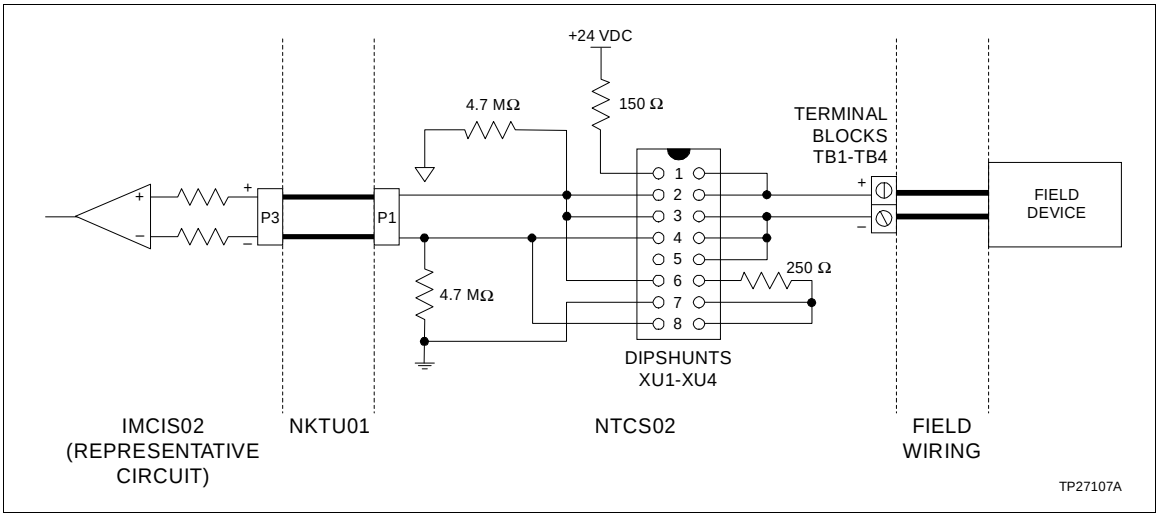

Figure A-3. NTCS02 Dipshunt for Analog Inputs

Table A-1. NTCS02 Dipshunt Configuration

Analog Input	
Application/Signal Type	**Dipshunt Configuration XU1-XU4**
System powered 4-20 mA	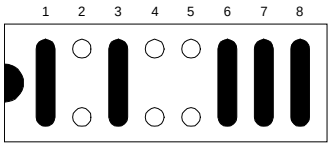
Externally powered 4-20 mA	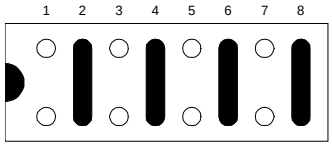
Single ended voltage	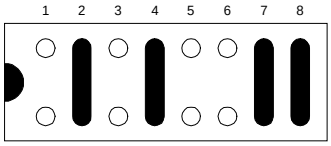
Differential voltage	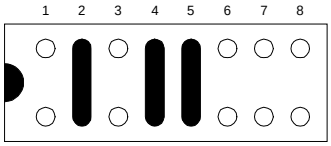

Analog Output	
Application/Signal Type	**Dipshunt Configuration XU9**
Both outputs in voltage mode	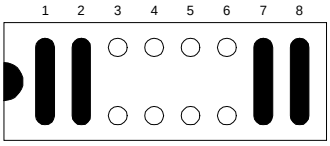
Output 1 in voltage mode, output 2 in current mode	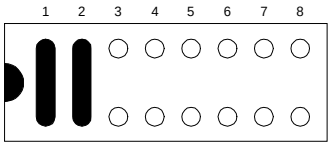
Output 1 in current mode, output 2 in voltage mode	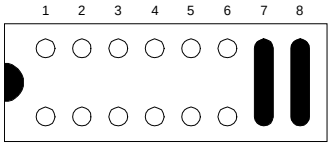
Both outputs in current mode	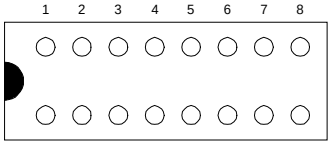

Table A-1. NTCS02 Dipshunt Configuration (continued)

Digital Input	
Application/Signal Type	**Dipshunt Configuration XU5-XU7**
System powered E1/E2	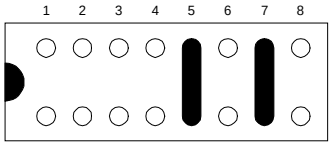
System powered E3/E4	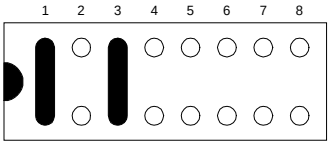
Field powered	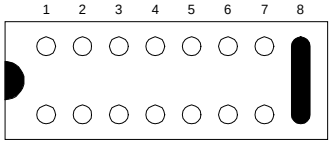 TP27118A

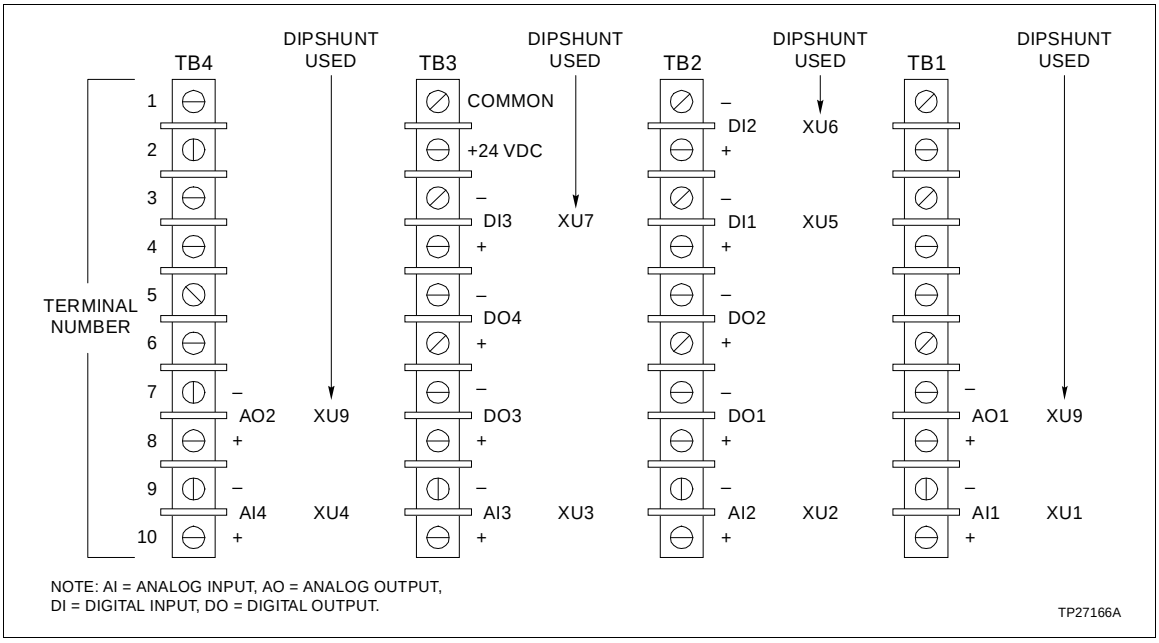

Figure A-4. NTCS02 Terminal Assignments

APPENDIX B - TERMINATION MODULE (NICS01) CONFIGURATION

INTRODUCTION

The IMCIS02 uses a NICS01 for termination. They handle 4 analog inputs, 2 analog outputs, 3 digital inputs and 4 digital outputs. Dipswitches on the Termination Module (NICS01) configure the I/O. Refer to Table B-1 to determine the dipswitch settings to configure your application. Figure B-1 shows terminal assignments for the digital and analog I/O signals. Refer to this figure when connecting field wiring to the NICS01.

NOTE: There are no dipswitches to configure for the digital I/O on the NICS01.

Table B-1. NICS01 Dipswitch Configuration

Analog Input	
Application/Signal Type	**Dipswitch Configuration S1-S4**
System powered 4-20 mA	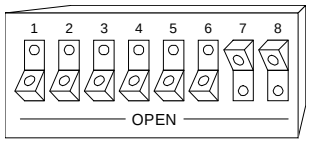
Externally powered 4-20 mA	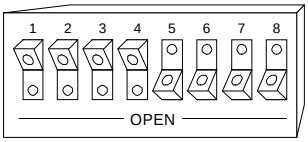
Single ended voltage	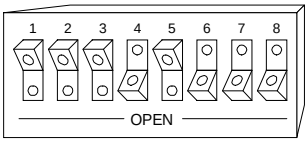
Differential voltage	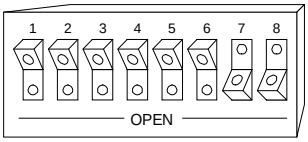

Table B-1. NICS01 Dipswitch Configuration (continued)

Analog Output	
Application/Signal Type	**Dipswitch Configuration S5**
Both outputs in voltage mode	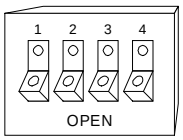
Output 1 in voltage mode, output 2 in current mode	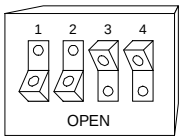
Output 1 in current mode, output 2 in voltage mode	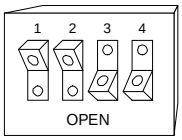
Both outputs in current mode	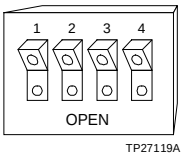

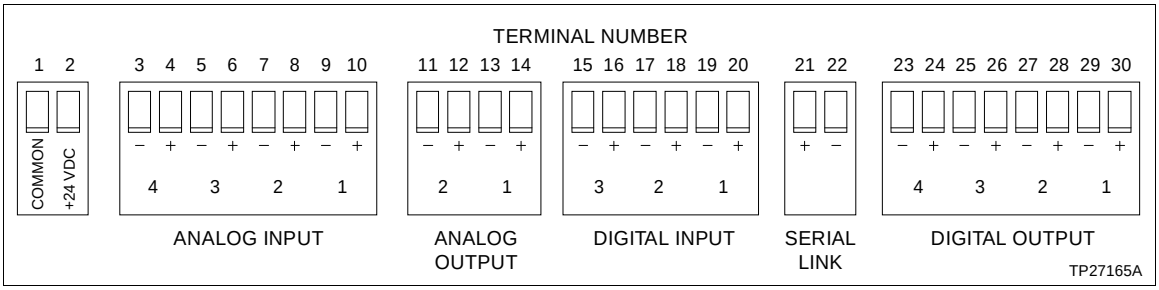

Figure B-1. NICS01 Terminal Assignments

Visit Elsag Bailey on the World Wide Web at http://www.bailey.com

Our worldwide staff of professionals is ready to meet *your* needs for process automation.
For the location nearest you, please contact the appropriate regional office.

AMERICAS
29801 Euclid Avenue
Wickliffe, Ohio USA 44092
Telephone 1-216-585-8500
Telefax 1-216-585-8756

ASIA/PACIFIC
152 Beach Road
Gateway East #20-04
Singapore 189721
Telephone 65-391-0800
Telefax 65-292-9011

EUROPE, AFRICA, MIDDLE EAST
Via Puccini 2
16154 Genoa, Italy
Telephone 39-10-6582-943
Telefax 39-10-6582-941

GERMANY
Graefstrasse 97
D-60487 Frankfurt Main
Germany
Telephone 49-69-799-0
Telefax 49-69-799-2406

Form I-E96-306A Litho in U.S.A. 690

Copyright © 1990 by Elsag Bailey Process Automation, As An Unpublished Work
® Registered Trademark of Elsag Bailey Process Automation
™ Trademark of Elsag Bailey Process Automation