Company: Joyoung International Trading Co.,Limited
Atten： Smiling
Mobile/WhatsApp/Wechat:+86 18050035902
Email: info@htechplc.com
Website: https://www.joyoungintl.com/

Bailey® infi 90®

E96-424

Instruction

Digital I/O Termination Unit
(NTDI01)

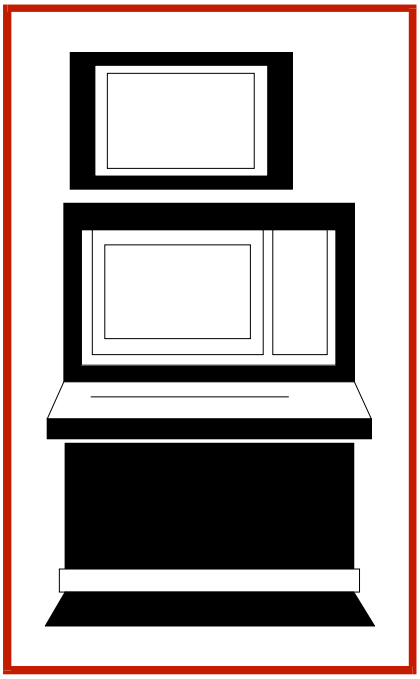

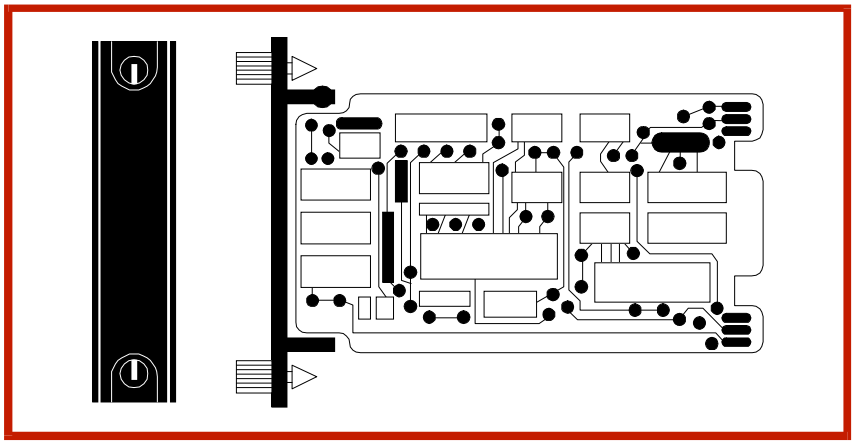

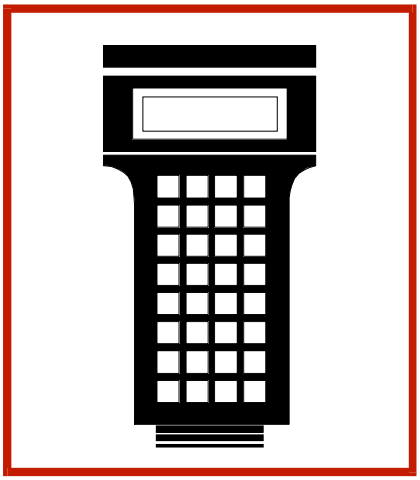

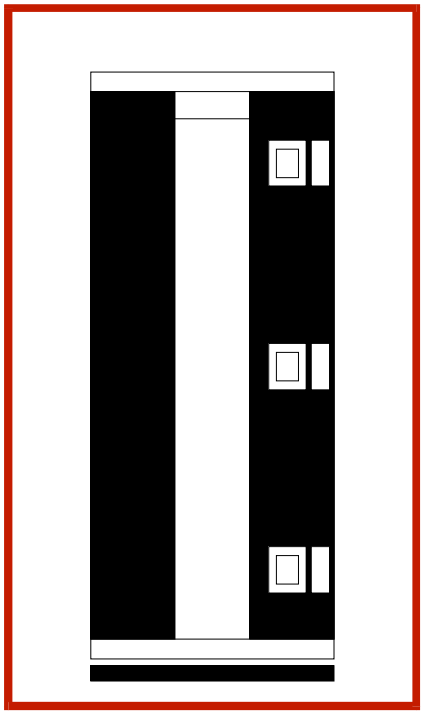

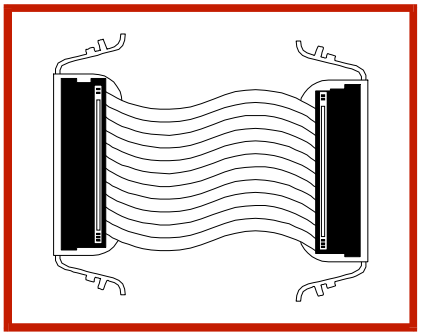

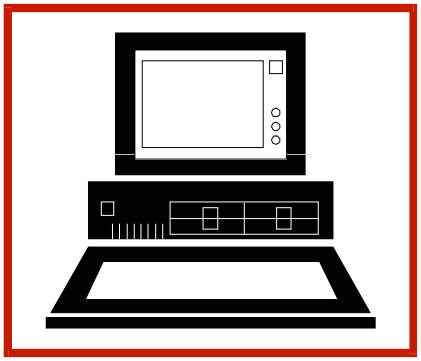

WARNING notices as used in this instruction apply to hazards or unsafe practices that could result in personal injury or death.

CAUTION notices apply to hazards or unsafe practices that could result in property damage.

NOTES highlight procedures and contain information that assists the operator in understanding the information contained in this instruction.

WARNING

INSTRUCTION MANUALS

DO NOT INSTALL, MAINTAIN, OR OPERATE THIS EQUIPMENT WITHOUT READING, UNDERSTANDING, AND FOLLOWING THE PROPER **Elsag Bailey** INSTRUCTIONS AND MANUALS; OTHERWISE, INJURY OR DAMAGE MAY RESULT.

RADIO FREQUENCY INTERFERENCE

MOST ELECTRONIC EQUIPMENT IS INFLUENCED BY RADIO FREQUENCY INTERFERENCE (RFI). CAUTION SHOULD BE EXERCISED WITH REGARD TO THE USE OF PORTABLE COMMUNICATIONS EQUIPMENT IN THE AREA AROUND SUCH EQUIPMENT. PRUDENT PRACTICE DICTATES THAT SIGNS SHOULD BE POSTED IN THE VICINITY OF THE EQUIPMENT CAUTIONING AGAINST THE USE OF PORTABLE COMMUNICATIONS EQUIPMENT.

POSSIBLE PROCESS UPSETS

MAINTENANCE MUST BE PERFORMED ONLY BY QUALIFIED PERSONNEL AND ONLY AFTER SECURING EQUIPMENT CONTROLLED BY THIS PRODUCT. ADJUSTING OR REMOVING THIS PRODUCT WHILE IT IS IN THE SYSTEM MAY UPSET THE PROCESS BEING CONTROLLED. SOME PROCESS UPSETS MAY CAUSE INJURY OR DAMAGE.

AVERTISSEMENT

MANUELS D'OPÉRATION

NE PAS METTRE EN PLACE, RÉPARER OU FAIRE FONCTIONNER L'ÉQUIPEMENT SANS AVOIR LU, COMPRIS ET SUIVI LES INSTRUCTIONS RÉGLEMENTAIRES DE **Elsag Bailey**. TOUTE NÉGLIGENCE À CET ÉGARD POURRAIT ÊTRE UNE CAUSE D'ACCIDENT OU DE DÉFAILLANCE DU MATÉRIEL.

PERTURBATIONS PAR FRÉQUENCE RADIO

LA PLUPART DES ÉQUIPEMENTS ÉLECTRONIQUES SONT SENSIBLES AUX PERTURBATIONS PAR FRÉQUENCE RADIO. DES PRÉCAUTIONS DEVRONT ÊTRE PRISES LORS DE L'UTILISATION DU MATÉRIEL DE COMMUNICATION PORTATIF. LA PRUDENCE EXIGE QUE LES PRÉCAUTIONS À PRENDRE DANS CE CAS SOIENT SIGNALÉES AUX ENDROITS VOULUS DANS VOTRE USINE.

PERTURBATIONS DU PROCÉDÉ

L'ENTRETIEN DOIT ÊTRE ASSURÉ PAR UNE PERSONNE QUALIFIÉE EN CONSIDÉRANT L'ASPECT SÉCURITAIRE DES ÉQUIPEMENTS CONTRÔLÉS PAR CE PRODUIT. L'AJUSTEMENT ET/OU L'EXTRACTION DE CE PRODUIT PEUT OCCASIONNER DES À-COUPS AU PROCÉDÉ CONTRÔLE LORSQU'IL EST INSÉRÉ DANS UNE SYSTÈME ACTIF. CES À-COUPS PEUVENT ÉGALEMENT OCCASIONNER DES BLESSURES OU DES DOMMAGES MATÉREILS.

NOTICE

The information contained in this document is subject to change without notice.

Elsag Bailey, its affiliates, employees, and agents, and the authors and contributors to this publication specifically disclaim all liabilities and warranties, express and implied (including warranties of merchantability and fitness for a particular purpose), for the accuracy, currency, completeness, and/or reliability of the information contained herein and/or for the fitness for any particular use and/or for the performance of any material and/or equipment selected in whole or part with the user of/or in reliance upon information contained herein. Selection of materials and/or equipment is at the sole risk of the user of this publication.

This document contains proprietary information of Elsag Bailey, Elsag Bailey Process Automation, and is issued in strict confidence. Its use, or reproduction for use, for the reverse engineering, development or manufacture of hardware or software described herein is prohibited. No part of this document may be photocopied or reproduced without the prior written consent of Elsag Bailey.

Preface

The Digital I/O Termination Unit (TDI) is an interface for INFI 90® Process Management System I/O signals. It provides the physical connection points for process field wiring, and configures the system I/O signals.

This instruction describes the purpose, features and specifications of the termination unit. It details the procedures to follow to set up and install the termination unit, and explains maintenance and replacement procedures.

The system engineer or technician using the TDI should read and understand this instruction ***before*** installing and configuring the termination unit. In addition, a complete understanding of the INFI 90 system is beneficial to the user.

® INFI 90 is a registered trademark of the Elsag Bailey Process Automation.

List of Effective Pages

Total number of pages in this manual is 48, consisting of the following:

Page No.	Change Date
Preface	Original
List of Effective Pages	Original
iii through vi	Original
1-1 through 1-5	Original
2-1 through 2-8	Original
3-1	Original
4-1 through 4-2	Original
5-1	Original
A-1 through A-3	Original
B-1 through B-3	Original
C-1 through C-3	Original
D-1 through D-2	Original
E-1 through E-3	Original
F-1 through F-2	Original
G-1 through G-2	Original
H-1 through H-4	Original
I-1 through I-3	óOriginal

When an update is received, insert the latest changed pages and dispose of the superseded pages.

NOTE: On an update page, the changed text or table is indicated by a vertical bar in the outer margin of the page adjacent to the changed area. A changed figure is indicated by a vertical bar in the outer margin next to the figure caption. The date the update was prepared will appear beside the page number.

Safety Summary

GENERAL WARNINGS	**Equipment Environment** All components, whether in transportation, operation or storage, must be in a noncorrosive environment. **Electrical Shock Hazard During Maintenance** Disconnect power or take precautions to insure that contact with energized parts is avoided when servicing.
SPECIFIC CAUTIONS	We strongly recommend that you turn the cabinet power off before doing any termination unit wiring. Failure to do so could result in equipment damage. Do not apply power until you verify all wire connections. (p. 2-6)

Sommaire de Securite

AVERTISSEMENTS D'ORDRE GÉNÉRAL	**Environnement de l'équipement** Ne pas soumettre les composants à une atmosphère corrosive lors du transport, de l'entreposage ou l'utilisation. **Possibilité de chocs électriques durant l'entretien** Débrancher l'alimentation ou prendre les précautions pour éviter tout contact avec des composants sous tension durant l'entretien.
ATTENTIONS D'ORDRE SPÉCIFIQUE	Il est fortement recommande de debrancher l'alimentation electrique du cabinet avant d'effectuer toute connexion aux cartes de raccordement du chassis. Des dommages aux equipements pourraient survenir dans le cas contraire. Ne pas rebrancher l'alimentation avant que toutes les connexions aient ete verifiees. (p. 2-6)

Table of Contents

Page

SECTION 1 - INTRODUCTION 1-1
- OVERVIEW 1-1
- INTENDED USER 1-1
- HARDWARE DESCRIPTION 1-2
- FEATURES 1-2
- INSTRUCTION CONTENT 1-3
- HOW TO USE THIS MANUAL 1-3
- GLOSSARY OF TERMS AND ABBREVIATIONS 1-3
- REFERENCE DOCUMENTS 1-4
- NOMENCLATURE 1-5
- SPECIFICATIONS 1-5

SECTION 2 - INSTALLATION 2-1
- INTRODUCTION 2-1
- SPECIAL HANDLING 2-1
- UNPACKING AND INSPECTION 2-1
- SETUP/PHYSICAL INSTALLATION 2-1
  - Physical Installation 2-2
  - Installing Dipshunts 2-2
  - Installing Fuses 2-5
- WIRING CONNECTIONS AND CABLING 2-5
  - Cable Connections 2-5
  - Terminal Block Wiring 2-6
  - System Power Connections 2-6
- PRE-OPERATING ADJUSTMENTS 2-7
- P1 PIN OUT 2-7
- NKTU01 CABLE I/O SIGNAL CONNECTIONS 2-8

SECTION 3 - MAINTENANCE 3-1
- INTRODUCTION 3-1
- MAINTENANCE SCHEDULE 3-1

SECTION 4 - REPAIR/REPLACEMENT PROCEDURES 4-1
- INTRODUCTION 4-1
- REPLACEMENT PROCEDURES 4-1

SECTION 5 - SUPPORT SERVICES 5-1
- INTRODUCTION 5-1
- REPLACEMENT PARTS AND ORDERING INFORMATION 5-1
- TRAINING 5-1
- TECHNICAL DOCUMENTATION 5-1

APPENDIX A - ANALOG SLAVE OTPUT MODULE (IMASO01) A-1
- INTRODUCTION A-1

APPENDIX B - DIGITAL I/O SLAVE MODULE (IMDSM05) B-1
- DIGITAL I/O SLAVE MODULE (IMDSM05) B-1

APPENDIX C - DIGITAL SLAVE INPUT MODULE (IMDSI02) C-1
- INTRODUCTION C-1

APPENDIX D - DIGITAL SLAVE OUTPUT MODULE (IMDSO01/02/03) D-1
- DIGITAL SLAVE OUTPUT MODULE (IMDSO01/02/03) D-1

Table of Contents (continued)

Page

APPENDIX E - DIGITAL SLAVE OUTPUT MODULE (IMDSO04) E-1
INTRODUCTION E-1

APPENDIX F - PULSE INPUT SLAVE MODULE (IMDSM04) F-1
INRODUCTION F-1

APPENDIX G - FREQUENCY COUNTER SLAVE MODULE (IMFCS01) G-1
FREQUENCY COUNTER SLAVE MODULE (IMFCS01) G-1

APPENDIX H - HYDRAULIC SERVO SLAVE MODULE (IMHSS01) H-1
INTRODUCTION H-1

APPENDIX I - LOGIC MASTER MODULE (IMLMM02) I-1
INTRODUCTION I-1

List of Tables

No.	Title	Page
2-1.	P1 Pin Out	2-7
2-2.	NKTU01 Cable Connections for I/O Signals	2-8
3-1.	Maintenance Schedule	3-1
5-1.	Spare Parts List	5-1
A-1.	NTDI01 with IMASO01 Dipshunt Configuration	A-2
B-1.	NTDI01 with IMDSM05 Dipshunt Configuration	B-2
C-1.	NTDI01 with IMDSI02 Dipshunt Configuration	C-2
D-1.	NTDI01 with IMDSO01/02/03Dipshunt Configuration	D-2
E-1.	NTDI01 with IMDSO04 Dipshunt Configuration	E-2
F-1.	NTDI01 with IMDSM04 Dipshunt Configuration	F-2
G-1.	NTDI01 with IMFCS01 Dipshunt Configuration	G-2
H-1.	NTDI01 with IMHSS01 Dipshunt Configuration	H-4
I-1.	NTDI01 with IMLMM02 Dipshunt Configuration	I-2

List of Figures

No.	Title	Page
1-1.	Termination Unit Application	1-1
2-1.	TDI Component Locations	2-2
2-2.	TDI Installation	2-3
2-3.	Point Configuration Socket Circuit Diagram	2-4
2-4.	Termination Unit Configuration Socket Circuit Diagram	2-4
2-5.	TDI Cable Connections	2-6
A-1.	NTDI01 to IMASO01 Diagram (Voltage Mode)	A-1
A-2.	NTDI01 to IMASO01 Diagram (Current Mode)	A-2
A-3.	NTDI01 with IMASO01 Terminal Assignments	A-3
B-1.	NTDI01 to IMDSM05 Diagram (Digital Input)	B-1
B-2.	NTDI01 to IMDSM05 Diagram (Digital Output)	B-2
B-3.	NTDI01 with IMDSM05 Terminal Assignments	B-3
C-1.	NTDI01 to IMDSI02 Diagram	C-1
C-2.	NTDI01 with IMDSI02 Terminal Assignments	C-3
D-1.	NTDI01 to IMDSO01/02/03 Diagram	D-1
D-2.	NTDI01 with IMDSO01/02/03 Terminal Assignments	D-2
E-1.	NTDI01 to IMDSO04 Diagram	E-1
E-2.	NTDI01 With IMDSO04 Terminal Assignments	E-3
F-1.	NTDI01 to IMDSM04 Diagram	F-1
F-2.	NTDI01 with IMDSM04 Terminal Assignments	F-2
G-1.	NTDI01 to IMFCS01 Diagram	G-1
G-2.	NTDI01 With IMFCS01 Terminal Assignments	G-2
H-1.	NTDI01 to IMHSS01 Diagram (Digital Input	H-1
H-2.	NTDI01 to IMHSS01 Diagram (Digital Output)	H-2
H-3.	NTDI01 to IMHSS01 Diagram (Analog Input)	H-2
H-4.	NTDI01 to IMHSS01 Diagram (Analog Output)	H-3
H-5.	NTDI01 with IMHSS01 Terminal Assignments	H-3
I-1.	NTDI01 to IMLMM02 Diagram (Digital Input)	I-1
I-2.	NTDI01 to IMLMM02 Diagram (Digital Output)	I-2
I-3.	NTDI01 with IMLMM02 Terminal Assignments	I-3

SECTION 1 - INTRODUCTION

OVERVIEW

The Digital I/O Termination Unit (NTDI01) is an interface for INFI 90 Process Management System I/O signals. These signals are used to control and monitor processes. Termination units provide the physical connection points for process field wiring, and configure the system I/O signals.

This instruction explains the purpose, features and specifications of the Digital I/O Termination Unit (TDI). It also details setup, installation, maintenance and replacement procedures. Figure 1-1 illustrates an INFI 90 application using a TDI for termination.

INTENDED USER

System engineers and technicians should read this manual before installing and operating the TDI. ***DO NOT*** install the TDI until you read and understand this instruction.

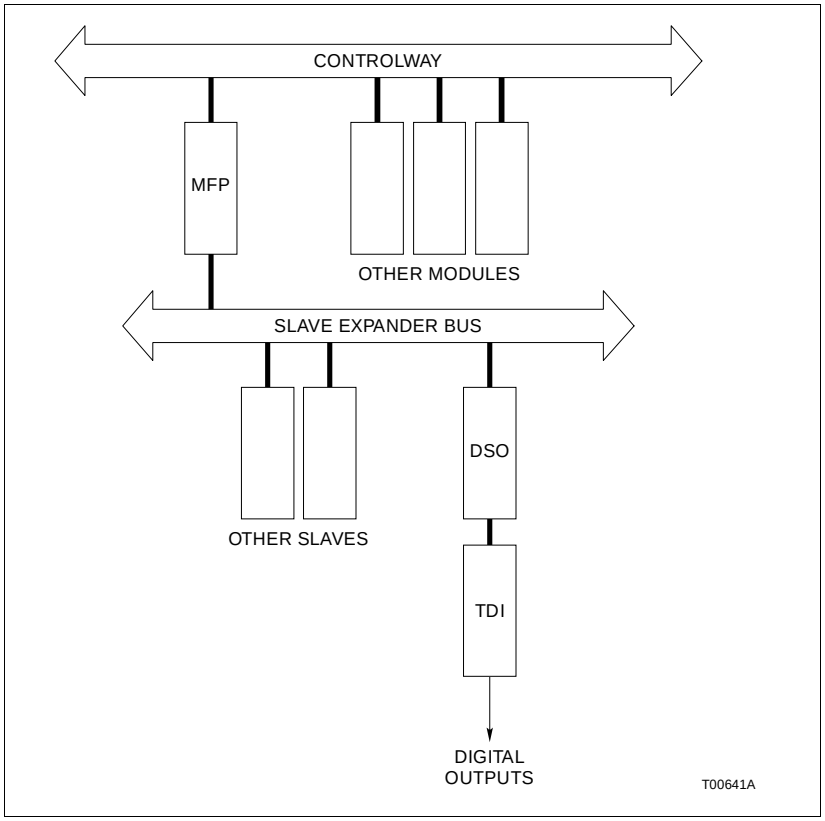

Figure 1-1. Termination Unit Application

HARDWARE DESCRIPTION

A TDI is a single printed circuit board that attaches to a Field Termination Panel (NFTP01) inside an INFI 90 cabinet. Two screws and spacers secure the TDI in place. Up to sixteen individual I/O signals can be connected to the TDI. The printed circuit board consists of:

1. Sixteen point configuration sockets (XU1 to XU16) to configure each I/O signal.

2. Four terminal blocks (TB1 to TB4) that provide the physical connection points for I/O signals.

3. A termination cable socket (P1) that connects the termination unit to its slave or master module.

4. I/O power (24 VDC, 125 VDC or 120 VAC) connection points (E1, E2 and E3 common) for system powered configurations.

5. Two on-board fuses (F1 and F2) to protect the E1/E2 power supplies and field devices connected to the termination unit.

6. A termination unit configuration socket (XU17) to configure TDI signal routing for some applications.

FEATURES

Versatile

The design of the TDI allows it to be used with a variety of INFI 90 modules. It can be used to input digital or analog signals to the INFI 90 system, or output digital or analog signals to field devices. These signals provide control and monitoring capabilities to the system.

Adaptable

Sixteen individual I/O signals can be connected to the TDI. These signals can be configured according to the process requirements. Dipshunts on the termination unit configure each I/O channel. Each channel can be configured as a system powered signal or field powered signal.

Reliable

The TDI is a passive assembly with no active components mounted on its circuit board; it does not require power to operate. This makes the termination unit less susceptible to failure.

System Protection

Fused power inputs protect INFI 90 module circuitry and process field devices.

Minor Maintenance

Other than routine maintenance as defined in Section 3, the TDI does not have any special maintenance requirements.

INSTRUCTION CONTENT

This manual consists of five sections.

Introduction Is an overview of the TDI: features, description and specifications.

Installation Describes the physical installation, cable connections, field wiring connections and configuration of the termination unit.

Maintenance Has a maintenance schedule for the termination unit and other INFI 90 assemblies.

Repair/Replacement Procedures Details the procedures to replace a termination unit.

Support Services Provides replacement part ordering information. It explains other areas of support Bailey Controls provides.

HOW TO USE THIS MANUAL

Read this entire manual through in sequence. It is important to become familiar with the entire contents of this manual before using the TDI.

1. Read and do the steps in Section 2.

2. Refer to the appendices when installing and configuring the TDI.

3. Refer to Section 3 for scheduled maintenance requirements.

4. Refer to Section 4 for steps to remove and replace a TDI.

5. Use Section 5 section when ordering replacement parts.

GLOSSARY OF TERMS AND ABBREVIATIONS

Term	Definition
Analog	A continuous time signal with an infinite number of values.
Controlway	High speed version of the module bus. The redundant peer-to-peer communication link that provides the communication path for point and status data transfer between intelligent modules within a process control unit.
Digital	A discrete signal having only two states: on or off.

Term	Definition
Dipshunt	Dual in-line package with shorting bars.
Field Termination Panel	INFI 90 cabinet assembly used to mount termination units.
Master Module	One of a series of controller modules designed to direct field processes through a slave module. The multi-function processor is an example.
Module Bus	The serial communication link between a process control module and other process control modules.
Module Mounting Unit	A card cage that provides electrical and communication support for INFI 90 modules.
Process Control Unit	Rack type industrial cabinet that contains master, slave and communication modules, and their communication paths.
Termination Unit	Provides input/output connection between plant equipment and the INFI 90 process modules. The termination unit is a flat circuit board for panel mounting.

REFERENCE DOCUMENTS

Document Number	Description
I-E96-209	Logic Master Module (IMLMM02)
I-E96-303	Analog Slave Output Module (IMASO01)
I-E96-307	Digital Slave Input Module (IMDSI02)
I-E96-308	Pulse Input Slave (IMDSM04)
I-E96-309	Digital I/O Slave (IMDSM05)
I-E96-310	Digital Slave Output Module (IMDSO01/02/03)
I-E96-313	Digital Slave Output Module (IMDSO04)
I-E96-314	Frequency Counter Slave (IMFCS01)
I-E96-315	Hydraulic Servo Slave (IMHSS01)
I-E96-506	Modular Power System
I-E93-900-5	Site Planning, Preparation and Equipment Installation
I-E93-909-3	I/O Power Panel

NOMENCLATURE

The following modules and equipment can be used with a TDI:

Nomenclature	Hardware
Modules	
IMASO01	Analog Slave Output Module
IMDSI02	Digital Slave Input Module
IMDSM04	Pulse Input Slave Module
IMDSM05	Digital I/O Slave Module
IMDSO01/02/03	Digital Slave Output Module
IMDSO04	Digital Slave Output Module
IMLMM02	Logic Master Module
IMFCS01	Frequency Counter Slave Module
IMHSS01	Hydraulic Servo Slave Module
Cables	
NKTU01	Termination Unit Cable
Mounting	
NFTP01	Field Termination Panel
Tools	
Dipshunt Cutting Tool	P/N AMP 435862-1

SPECIFICATIONS

Mounting	Attaches to a standard INFI 90 Field Termination Panel
Wire Size	22 gauge (minimum) 12 gauge (maximum)
Environmental	
Ambient Temperature	0° to 70° C (32° to 158° F)
Relative Humidity	0% to 95% up to 55° C (131° F)(noncondensing)
	0% to 45% at 70° C (158° F)(noncondensing)
Altitude	Sea Level to 3 Km (1.86 miles)
Air Quality	Noncorrosive
Certification	CSA certified for use as process control equipment in an ordinary (nonhazardous) location.
	CSA certified for I/O voltages up to 150 VDC or 120 VAC.

SPECIFICATIONS SUBJECT TO CHANGE WITHOUT NOTICE

SECTION 2 - INSTALLATION

INTRODUCTION

This section explains the procedures to install and configure a Digital I/O Termination Unit (TDI). ***DO NOT*** proceed with installation until you read and understand the steps explained.

SPECIAL HANDLING

The TDI does not use electrostatic sensitive devices. However, during installation of the TDI you may be required to remove a module from the INFI 90 module mounting unit. Most master/slave modules in the INFI 90 system use electrostatic sensitive devices, and require special handling.

NOTE: Always use Bailey's Field Static Kit (P/N 1948385A2 - consists of wrist strap, ground cord assembly, alligator clip) when working with modules. The kit is designed to connect a technician and the static dissipative work surface to the same ground point to prevent damage to the modules by electrostatic discharge.

UNPACKING AND INSPECTION

1. Unpack and examine the termination unit immediately to verify it has not been damaged in transit.

2. Notify the nearest Bailey Controls sales office of any such damage.

3. File a claim for any damage with the transportation company that handled the shipment.

4. Use the original packing material and container to store the hardware.

5. Store the hardware in an environment of good air quality, free from temperature and moisture extremes.

SETUP/PHYSICAL INSTALLATION

Several steps must be performed to configure the TDI for its intended application. After securing the termination unit to a field termination panel, dipshunts must be configured and installed, fuses inserted, external connections made and, if applicable, system power connected to the TDI.

Figure 2-1 shows the TDI and the location of the dipshunt sockets (XU1 to XU17), terminal blocks (TB1 to TB4), cable connector (P1), system power connectors (E1, E2 and E3) and fuses (F1 and F2).

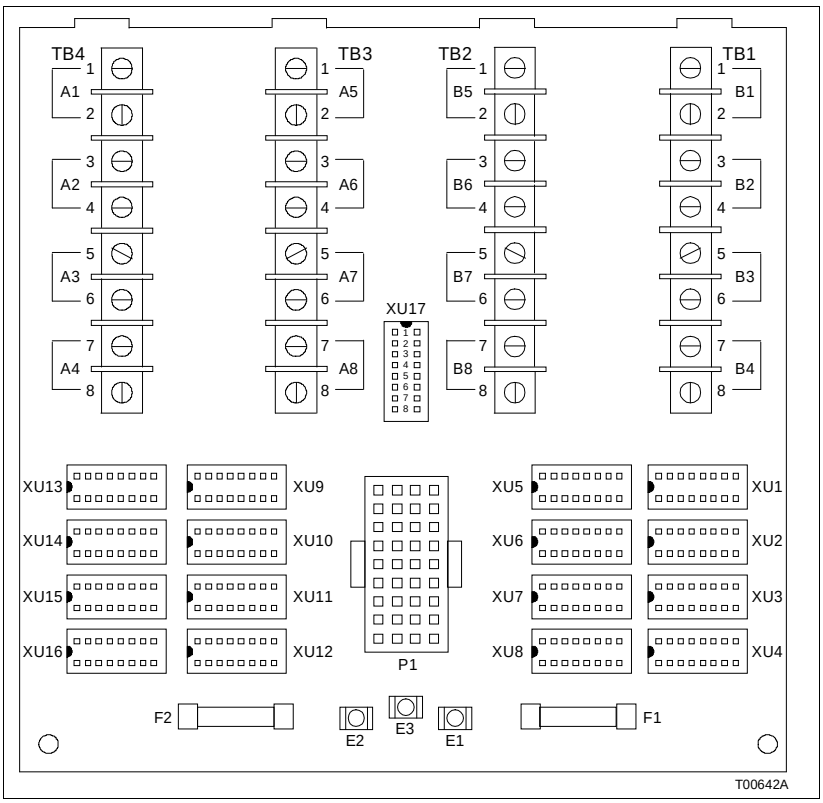

Figure 2-1. TDI Component Locations

Physical Installation

NOTE: The installation section provides instructions pertaining to the physical installation of the termination unit only. For complete master/slave module information, refer to the appropriate product instruction. Refer to ***REFERENCE DOCUMENTS*** in Section 1.

The TDI mounts on a standard INFI 90 field termination panel; refer to Figure 2-2 when installing. To secure the termination unit to the field termination panel:

1. Insert the TDI circuit board tabs into the termination panel standoff slots; slide the circuit board into position.

2. Secure the circuit board to the termination panel spacers with two screws (#10×¾).

Installing Dipshunts

Each TDI application requires a different dipshunt configuration. Refer to the appendices to determine the dipshunt strapping configurations for your application.

Sockets XU1 through XU16 are point (I/O) configuration sockets. These sockets configure each of the sixteen possible I/O signals. A point dipshunt is not required if a point is not used. Socket XU17 is a termination unit configuration socket used to

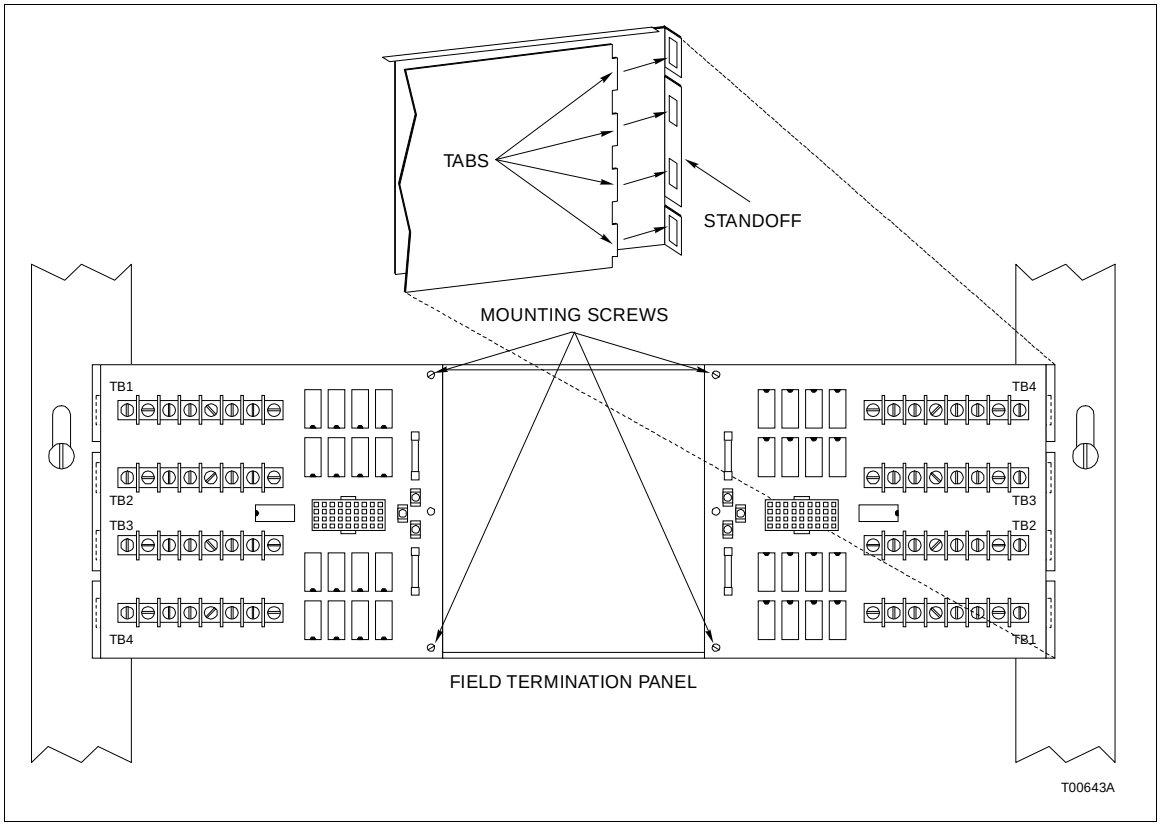

Figure 2-2. TDI Installation

configure TDI signal routing for some applications. Figure 2-1 shows the location of these sockets on the TDI. Figure 2-3 is a circuit diagram of a point configuration socket. Figure 2-4 is a circuit diagram of the termination unit configuration socket.

To configure dipshunt sockets:

1. Refer to the appropriate appendix for your application.

   NOTE: Configure the dipshunts before installing them. If using a system powered configuration, DO NOT enable I/O power to the TDI until all required dipshunts are configured.

2. Determine the dipshunt strapping configuration for the I/O point and corresponding socket (XU1 through XU17) you are currently configuring. Refer to the terminal assignment figure in the appendices to cross reference I/O point to dipshunt socket.

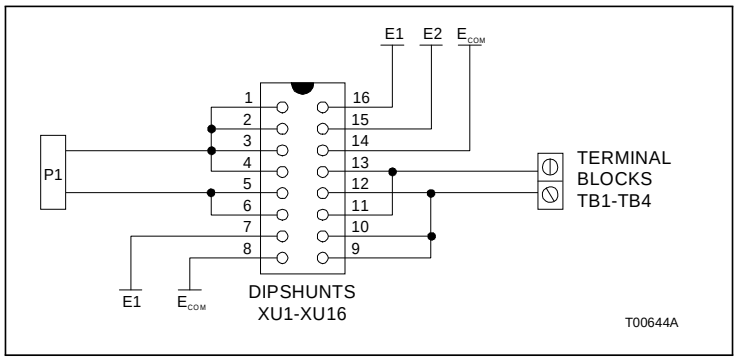

Figure 2-3. Point Configuration Socket Circuit Diagram

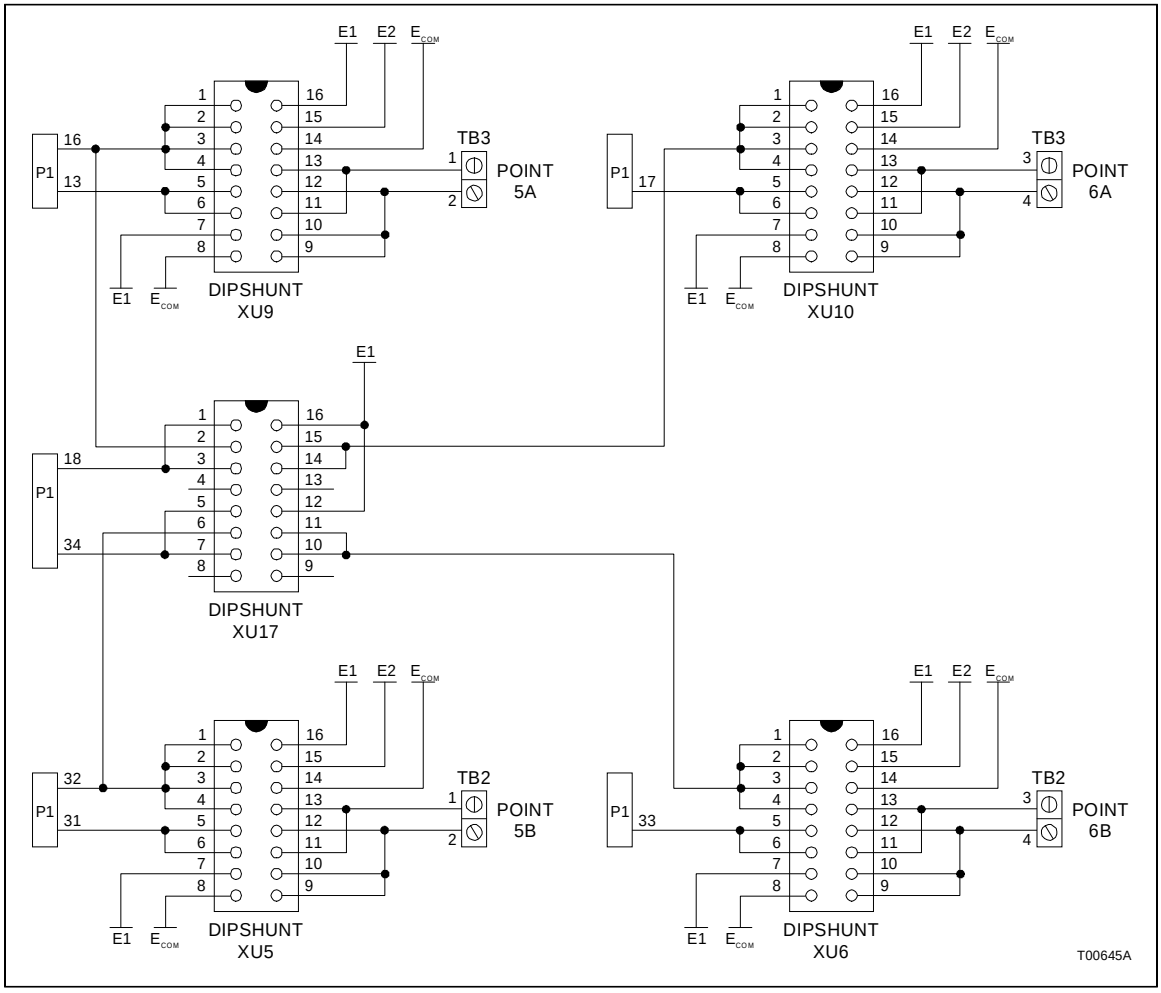

Figure 2-4. Termination Unit Configuration Socket Circuit Diagram

3. Break the connection straps to configure the dipshunt as defined in the appendix. Cut the dipshunt straps using a standard shunt cutting tool (AMP PN 435862-1). Always make sure that the cut straps are completely broken and that adjacent straps are not touching.

4. Insert the configured dipshunt into the appropriate socket taking care not to bend the dipshunt pins.

NOTE: Make sure that pin 1 of the dipshunt corresponds to pin 1 of the socket when installing.

5. Repeat steps two through four until all required sockets are configured.

Installing Fuses

On-board fuses provide protection for the system power supplies and field devices. Figure 2-1 shows the location of the fuses on the TDI. Fuse 1 (F1) is for the E1 power supply; fuse 2 (F2) is for the E2 power supply.

Determine the I/O voltage requirements for your application and insert the appropriate fuse in the circuit board fuse holders. If a 24 VDC I/O voltage is required from E1 or E2, use a three amp fuse (P/N 194776A13001). If a 125 VDC or 120 VAC I/O voltage is required from E1 or E2, use a 0.25 amp fuse (P/N 194776A12500).

WIRING CONNECTIONS AND CABLING

Terminal blocks (TB1 through TB4) on the TDI connect field wiring to the INFI 90 system. A termination cable connects the termination unit to its master/slave module to route I/O signals.

Cable Connections

Install the termination cable (NKTU01) after the TDI is properly mounted on the field termination panel. Figure 2-5 shows the cable connections. To install the termination unit cable:

1. Insert the hooded end of the cable into the module mounting unit backplane slot assigned to the master/slave module. The cable should latch securely in place. P3 of the master/slave module in the module mounting unit connects to this end of the cable.

2. Insert the socket connector end of the cable in the P1 connector of the TDI. Figure 2-1 shows the location of P1 on the TDI circuit board.

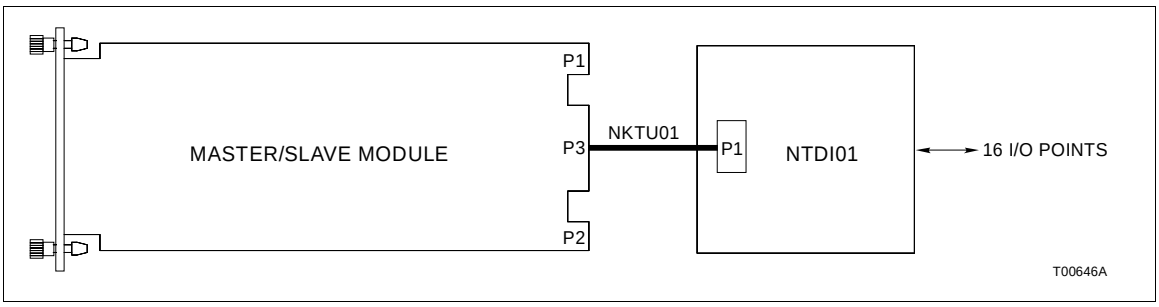

Figure 2-5. TDI Cable Connections

Terminal Block Wiring

CAUTION	**We strongly recommend that you turn the cabinet power off before doing any termination unit wiring. Failure to do so could result in equipment damage. Do not apply power until you verify all wire connections.**
ATTENTION	**Il est fortement recommande de debrancher l'alimentation electrique du cabinet avant d'effectuer toute connexion aux cartes de raccordement du chassis. Des dommages aux equipements pourraient survenir dans le cas contraire. Ne pas rebrancher l'alimentation avant que toutes les connexions aient ete verifiees.**

The polarity and use of each terminal depends on the configuration of the TDI. Refer to Figure 2-1 for general I/O point terminal block assignments. Refer to the appendices for specific application I/O point terminal block assignments and point wiring polarity. A 12 AWG to 22 AWG wire should be used for field wiring.

NOTES:
1. Proper polarity wiring is required for DC signals.
2. There are only 30 pins on the master/slave module P3 connector; the termination unit can handle 16 I/O points. When using points 7 and 8 of each group, the positive (+) side of these points share a pin (A7 - A8 and B7 - B8). Refer to Table 2-1.

Each installation is unique, presenting a special set of requirements and operating conditions. Refer to the ***Site Planning, Preparation and Equipment Installation Product Instruction, I-E93-900-5*** for analog and digital I/O line wiring requirements. It provides a general description of wiring recommendations for process I/O signals.

System Power Connections

Some I/O configurations require system power (24 VDC, 125 VDC or 120 VAC). Three terminals (E1, E2 and E3 common)

provide connection points for system power wiring and ground. See Figure 2-1 for the location of these terminals.

System power connects to the termination unit through faston connectors E1 and E2, and it is distributed to the configuration sockets through the fuses. Any combination of power can be connected to these fastons depending on the application. However, this requires careful system analysis to ensure circuit board trace amperage capacity is not exceeded. The TDI can handle two amps continuous through a single trace. System ground connects through faston connector E3.

Use 12 to 14 AWG wire to connect power from the I/O power panel or modular power supplies to the TDI terminals. Refer to the ***I/O Power Panel Product Instruction, I-E93-909-3*** or ***Modular Power System Product Instruction, I-E96-506*** for further details.

PRE-OPERATING ADJUSTMENTS

The TDI does not require any pre-operating adjustments.

P1 PIN OUT

Refer to Figure 2-3 for connections between P1 pins and point configuration sockets XU1 through XU4, XU7, XU8 and XU11 through XU16. For these sockets, all even numbered P1 pins in Table 2-1 connect to pins 1, 2, 3 and 4 of the sockets; all odd numbered P1 pins connect to pins 5 and 6 of the sockets.

Refer to Figure 2-4 for connection between P1 pins, the termination unit configuration socket and point configuration sockets XU5, XU6, XU9 and XU10.

Table 2-1. P1 Pin Out

Pin	Socket	I/O	Pin	Socket	I/O	Pin	Socket	I/O
1	XU13	1A	13	XU9	5A	25	XU2	2B
2	XU13	1A	14	E3	COM	26	XU2	2B
3	XU14	2A	15	NC		27	XU3	3B
4	XU14	2A	16	XU9	5A	28	XU3	3B
5	XU15	3A	17	XU10	6A	29	XU4	4B
6	XU15	3A	18	XU17	6A	30	XU4	4B
7	XU16	4A	19	XU11	7A	31	XU5	5B
8	XU16	4A	20	XU11/XU12	7A/8A	32	XU5	5B
9	NC		21	XU8	8B	33	XU6	6B
10	NC		22	XU12	8A	34	XU17	6B
11	NC		23	XU1	1B	35	XU7	7B
12	NC		24	XU1	1B	36	XU7/XU8	7B/8B

NOTES: A = Group A; B = Group B; NC = Not Connected

NKTU01 CABLE I/O SIGNAL CONNECTIONS

Table 2-2 shows the cable pin connections from P3 of a master/slave module to P1 of the TDI for the I/O signals.

Table 2-2. NKTU01 Cable Connections for I/O Signals

NKTU01	NKTU01
P3[1] — P1[2]	P3[1] — P1[2]
1 — 1	J — 22
A — 2	9 — 23
2 — 3	K — 24
B — 4	10 — 25
3 — 5	L — 26
C — 6	11 — 27
4 — 7	M — 28
D — 8	12 — 29
5 — 13	N — 30
E — 16	13 — 31
6 — 17	P — 32
F — 18	14 — 33
7 — 19	R — 34
H — 20	15 — 35
8 — 21	S — 36

NOTES:
1. P3 on master/slave module
2. P1 on NTDI01

SECTION 3 - MAINTENANCE

INTRODUCTION

The Digital I/O Termination Unit (TDI) requires limited maintenance. This section contains a maintenance schedule.

MAINTENANCE SCHEDULE

Perform the tasks in Table 3-1 at the specified intervals.

Table 3-1. Maintenance Schedule

Task	Interval
Clean and tighten all power and grounding connections	Every six months or during plant shutdown, whichever occurs first
Use a static safe vacuum cleaner to remove dust from: Modules Module Mounting Unit Fan Assembly Power Entry Panel Termination Units/Modules	Every six months or during plant shutdown, whichever occurs first

SECTION 4 - REPAIR/REPLACEMENT PROCEDURES

INTRODUCTION

This section explains the replacement procedures for a Digital I/O Termination Unit (TDI). The tools required to remove and replace a termination unit are:

- Flat head screwdriver.
- Cross head screwdriver.
- Chip puller.
- Shunt cutting tool (AMP PN 435862-1).

REPLACEMENT PROCEDURES

A TDI does not have any active components. This limits any replacement requirements due to failure. To remove a TDI:

1. Turn the INFI 90 cabinet power OFF.

   NOTE: The power supplies providing power to the termination unit may not be located in the same cabinet as the termination unit; make sure to turn OFF the cabinet that is supplying the power.

2. Remove all field wiring connected to the terminal blocks (TB1 through TB4). If not labeled, labeling the wires prior to removal is recommended to reduce re-installation time.

3. If connected, disconnect the system power and ground from E1, E2 and E3. Verify that these wires are labeled. If not, labeling is recommended.

4. Disconnect the termination cable (NKTU01) from P1.

5. Remove the two screws securing the TDI to the field termination panel and slide the termination unit out. The screws secure the termination unit to the field termination panel, be sure to hold the termination unit while removing the screws.

6. Either remove the dipshunts from the old TDI and install them in the new one, or configure and install new dipshunts exactly as configured on the old termination unit. Refer to the appropriate appendix for dipshunt strappings.

   NOTE: Cut the dipshunt straps using a standard shunt cutting tool. Always make sure that the cut straps are completely broken and that adjacent straps are not touching.

7. Insert fuses into the circuit board fuse holders. Refer to ***Installing Fuses*** in the installation section.

8. Insert the TDI circuit board tabs into the termination panel standoff slots; slide the circuit board into position. Refer to Figure 2-2.

9. Secure the circuit board to the termination panel spacers with the two screws removed earlier.

10. If required, reconnect the system power wires to E1 and E2, and system ground to E3.

11. Reconnect the termination cable to P1.

12. Reconnect all field wiring to the terminal blocks.

13. Verify all connections ***before*** turning the system cabinet power ON.

SECTION 5 - SUPPORT SERVICES

INTRODUCTION

Bailey Controls is ready to help in the use, application and repair of its products. Contact your nearest sales office to make requests for sales, applications, installation, repair, overhaul and maintenance contract services.

REPLACEMENT PARTS AND ORDERING INFORMATION

When making repairs at your facility, order replacement parts from a Bailey Controls sales office. Provide this information:

1. Part description, part number and quantity.

2. Model and serial numbers (if applicable).

3. Bailey Controls instruction manual number, page number and reference figure that identifies the part.

When you order standard parts from Bailey Controls, use part numbers and descriptions from the Spare Parts List Table 5-1. You must order parts without commercial descriptions from the nearest Bailey Controls sales office.

Table 5-1. Spare Parts List

Description	Component	Part No.
Dipshunt (16 pin)	U1 - U17	1946715A8
Fuse 3.0 Amp	F1, F2	194776A13001
Fuse 0.25 Amp	F1, F2	194776A12500

TRAINING

Bailey Controls has a modern training facility that provides service and repair instruction. This facility is available for in-plant training of your personnel. Contact a Bailey Controls sales office for specific information and scheduling.

TECHNICAL DOCUMENTATION

You can obtain additional copies of this manual from the nearest Bailey Controls sales office at a reasonable charge.

APPENDIX A - ANALOG SLAVE OTPUT MODULE (IMASO01)

INTRODUCTION

The IMASO01 uses an NTDI01 for termination. Dipshunts on the termination unit configure the analog outputs that are sent to the process. The Analog Slave Output (ASO) module output signals are 4 to 20 mA or 1 to 5 VDC depending on the ASO module configuration.

Figures A-1 and A-2 show an NTDI01 point configuration dipshunt ***without*** strapping, and the analog signal path from the ASO module to the field device for a termination unit application. Refer to Table A-1 to determine the dipshunt strapping to configure your application. Figure A-3 shows the terminal assignment and polarity for each of the analog output signals. Refer to this figure when connecting field wiring to the NTDI01.

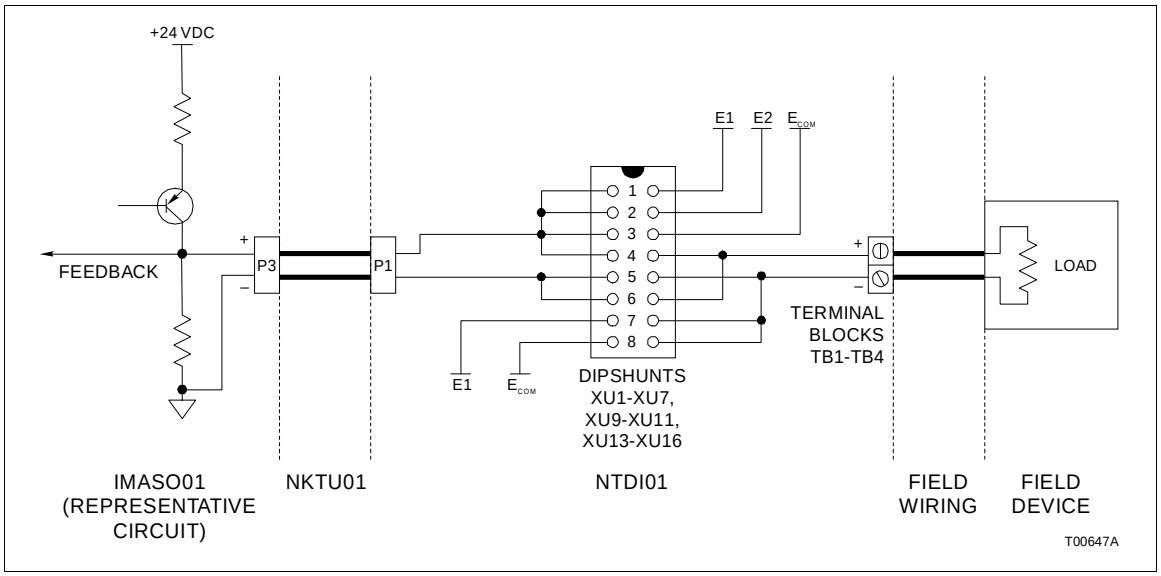

Figure A-1. NTDI01 to IMASO01 Diagram (Voltage Mode)

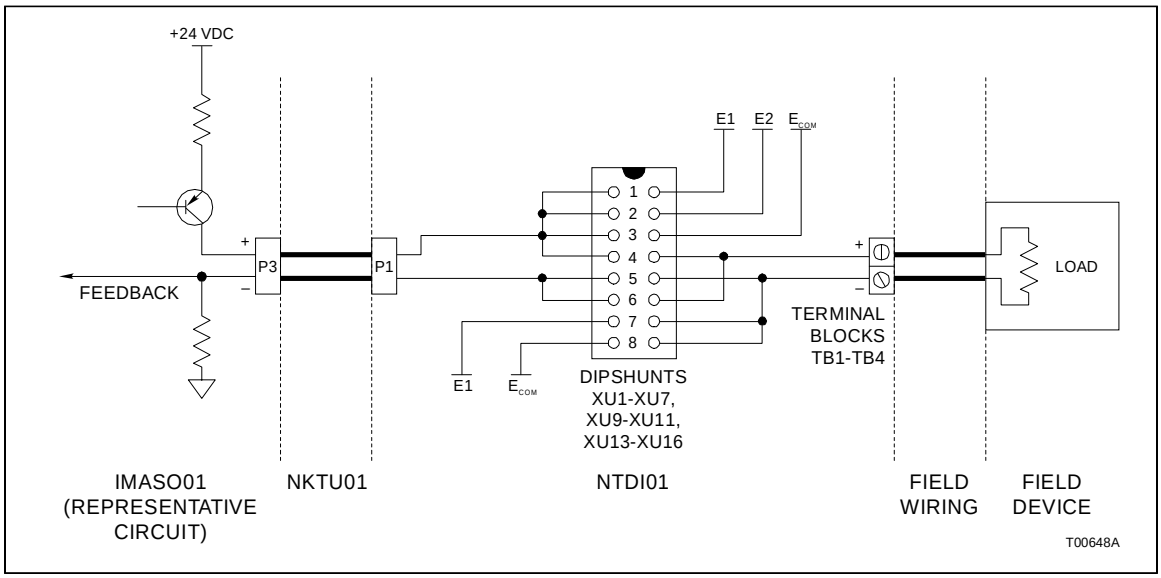

Figure A-2. NTDI01 to IMASO01 Diagram (Current Mode)

Table A-1. NTDI01 with IMASO01 Dipshunt Configuration

Application/Signal Type	Dipshunt Configuration
Output Signals 1-5 VDC, 4-20 mA	XU1-XU7, XU9-XU11, XU13-XU16 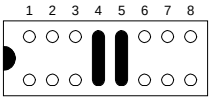
24 VDC Power to Slave	XU12 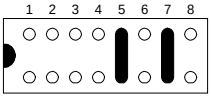
Signal Routing for Channels 6 and 13	XU17 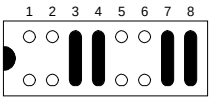 T00649A

NOTE: XU8 is not used.

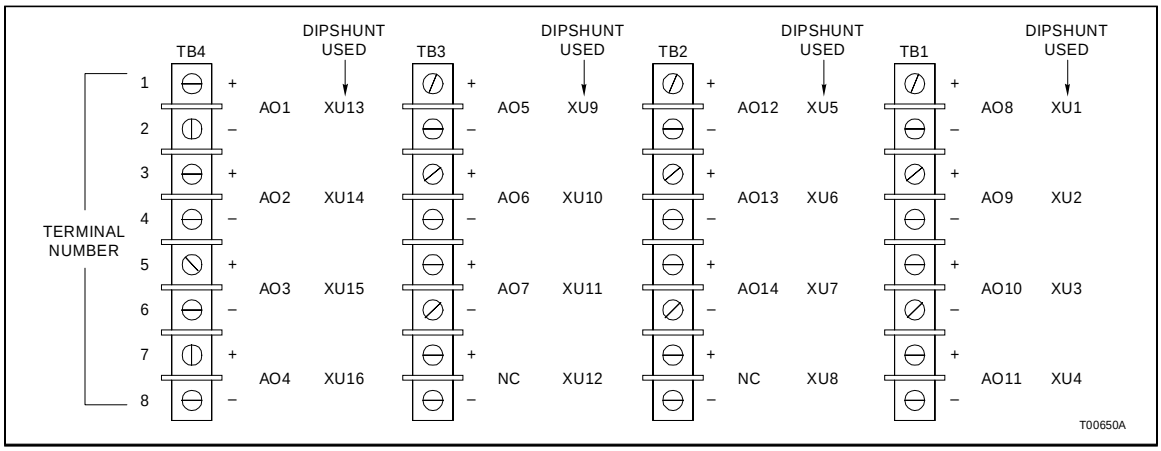

NOTE: AO=Analog Output

Figure A-3. NTDI01 with IMASO01 Terminal Assignments

APPENDIX B - DIGITAL I/O SLAVE MODULE (IMDSM05)

DIGITAL I/O SLAVE MODULE (IMDSM05)

The IMDSM05 uses an NTDI01 for termination. Dipshunts on the termination unit configure the digital I/O signals. The 16 Digital I/O Slave (DSM) module I/O signals are divided into two groups of eight (group A and group B). Each group can be configured as an input or output group (i.e, both output groups, both input groups or one output and one input group) depending on the DSM configuration. DSM I/O voltages are 24 VDC (system powered or externally powered).

Figures B-1 and B-2 show an NTDI01 point configuration dipshunt ***without*** strapping, and the digital signal path from the DSM module to the field device for a termination unit application. Refer to Table B-1 to determine the dipshunt strapping to configure your application. Figure B-3 shows the terminal assignment and polarity for each of the digital I/O signals. Refer to this figure when connecting field wiring to the NTDI01.

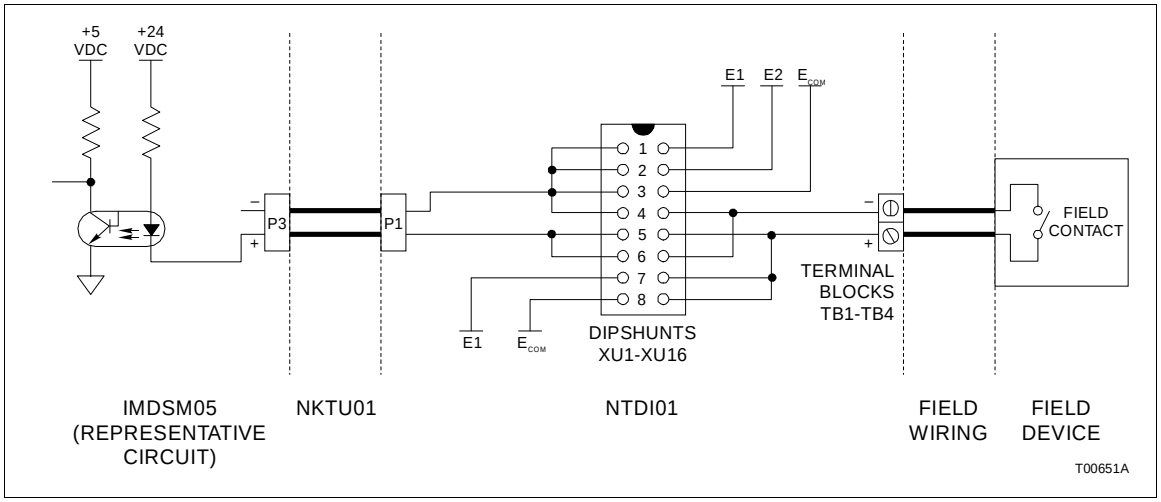

Figure B-1. NTDI01 to IMDSM05 Diagram (Digital Input)

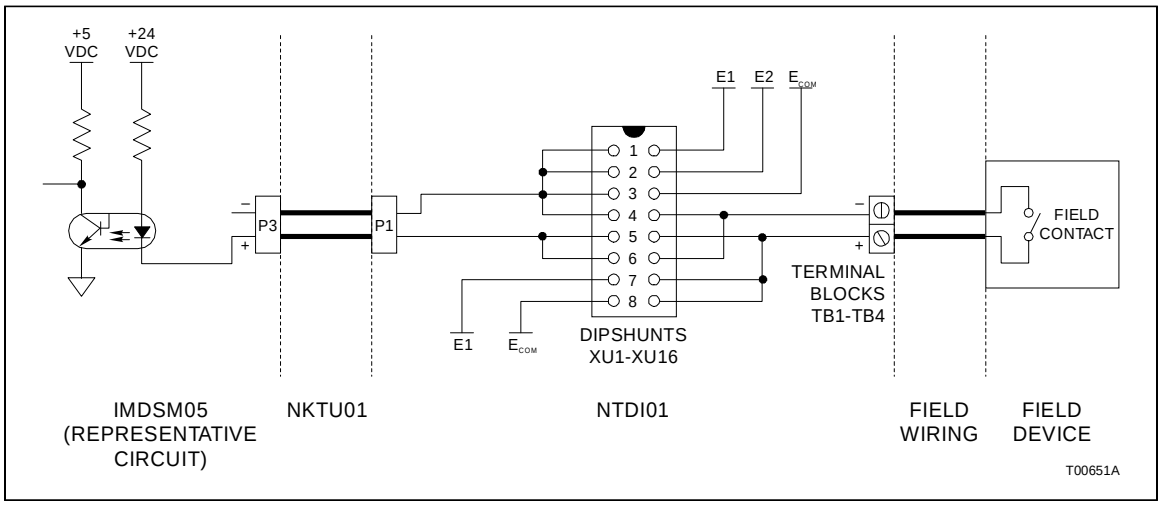

Figure B-2. NTDI01 to IMDSM05 Diagram (Digital Output)

Table B-1. NTDI01 with IMDSM05 Dipshunt Configuration

Application/ Signal Type	Dipshunt Configuration XU1-XU16	Dipshunt Configuration XU17
24 VDC Logic I/O or System Powered Contact Input	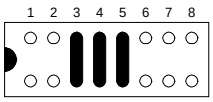	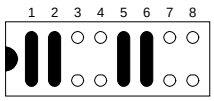
Powering an External Load	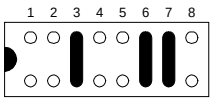	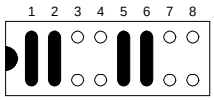
Sinking an External Load	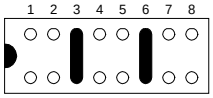	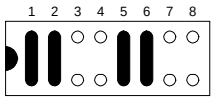
Isolated Outputs	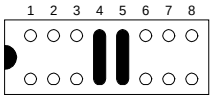	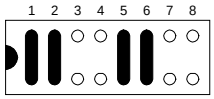 T00652A

NOTES:
1. When using the 24 VDC Logic I/O, System Powered Contact Input or Two Wire Isolated Output configurations, some of the I/O points are connected internally on the termination unit: A5(-)and A6(-), A7(-) and A8(-), B5(-) and B6(-), and B7(-) and B8(-).
2. When using the Powering An External Load configuration, all positive connection points are internally wired on the termination unit to the +24 VDC I/O power.

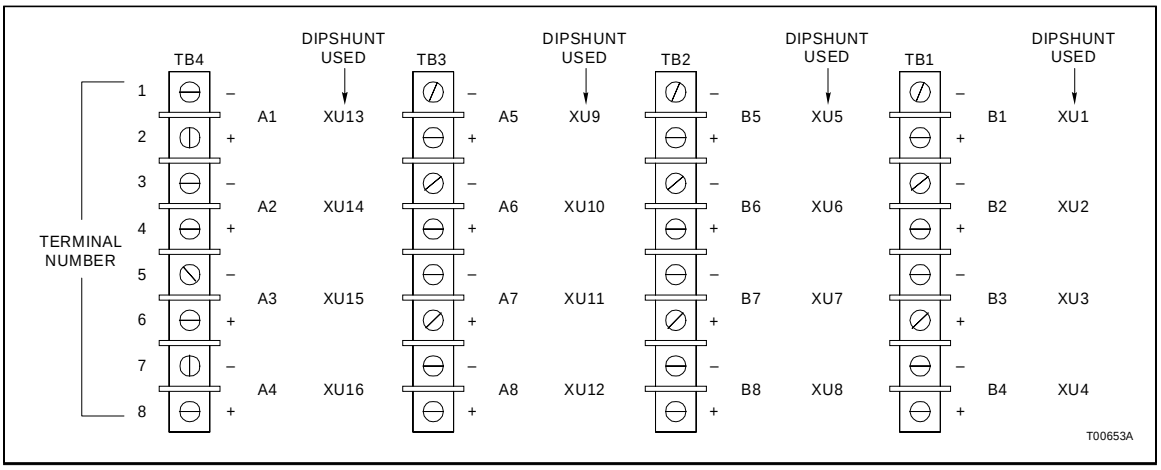

NOTE: When using the Sinking An External Load configuration, make external connections to the negative terminals only.

Figure B-3. NTDI01 with IMDSM05 Terminal Assignments

APPENDIX C - DIGITAL SLAVE INPUT MODULE (IMDSI02)

INTRODUCTION

The IMDSI02 uses an NTDI01 for termination. Dipshunts on the termination unit configure the digital inputs. The Digital Slave Input (DSI) module accepts inputs of 24 VDC, 125 VDC and 120 VAC.

Figure C-1 shows an NTDI01 point configuration dipshunt ***without*** strapping, and the digital signal path from the field device (contact) to the DSI module for a termination unit application. Refer to Table C-1 to determine the dipshunt strapping to configure your application. Figure C-2 shows the terminal assignment and polarity for each of the digital input signals. Refer to this figure when connecting field wiring to the NTDI01.

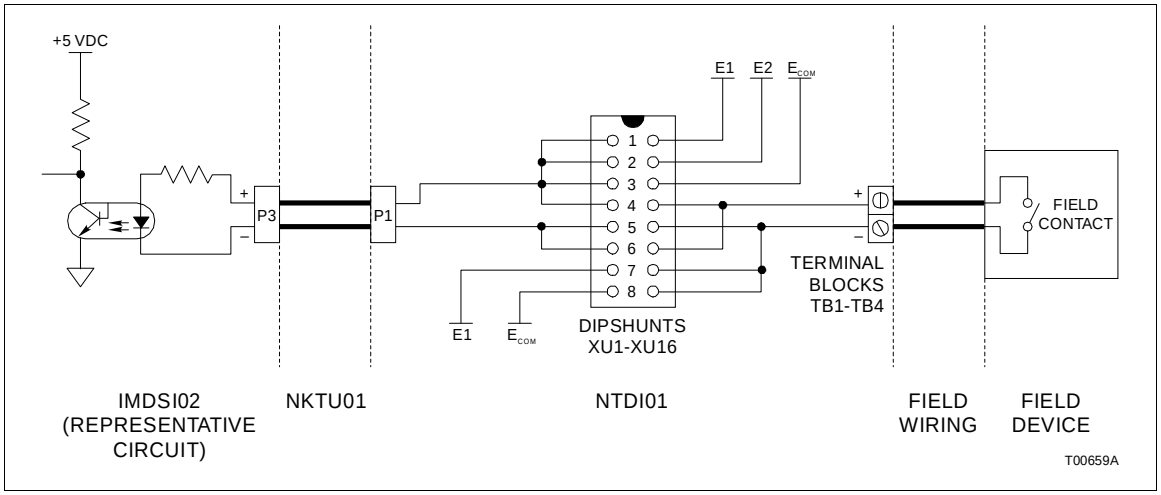

Figure C-1. NTDI01 to IMDSI02 Diagram

Table C-1. NTDI01 with IMDSI02 Dipshunt Configuration

Application/Signal Type	Dipshunt Configuration
Field Powered Contact	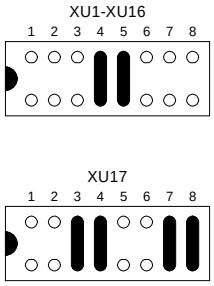
System Powered from E1, 24 VDC, 125 VDC, 120 VAC	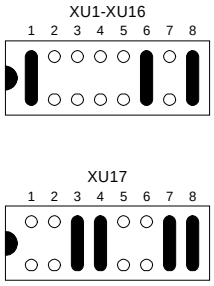
System Powered from E2, 24 VDC, 125 VDC, 120 VAC	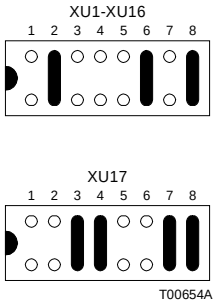

NOTE: Each TDI input point dipshunt configuration must match the DSI input jumper configuration.

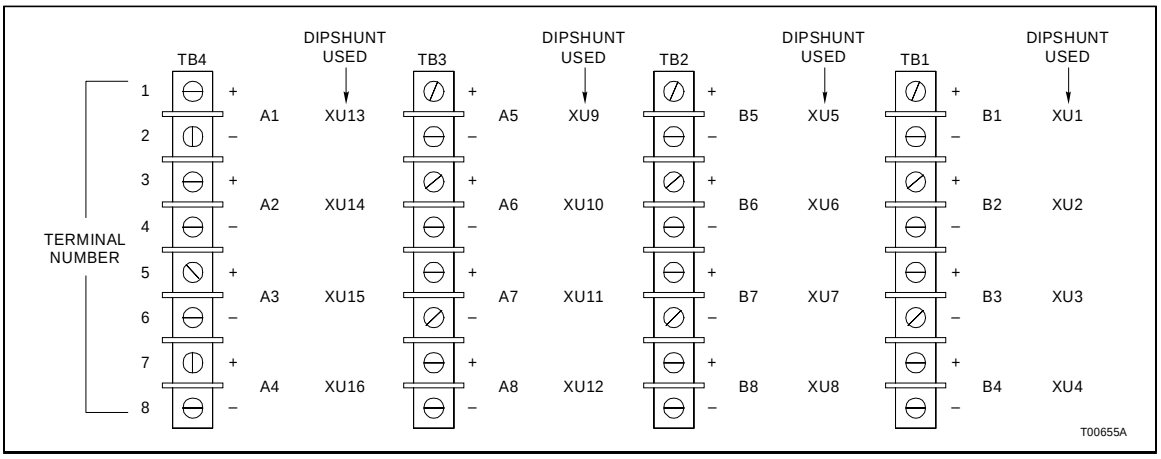

NOTE: When using the System Powered contact configuration, the polarities shown in Figure C-2 should be reversed.

Figure C-2. NTDI01 with IMDSI02 Terminal Assignments

APPENDIX D - DIGITAL SLAVE OUTPUT MODULE (IMDSO01/02/03)

DIGITAL SLAVE OUTPUT MODULE (IMDSO01/02/03)

The IMDSO01/02/03 uses an NTDI01 for termination. Dipshunts on the termination unit configure the digital outputs that are sent to the process. The Digital Slave Output (DSO) module switches voltages of 24 to 240 VAC (IMDSO01), 4 to 60 VDC (IMDSO02) or 5 to 160 VDC (IMDSO03).

Figure D-1 shows an NTDI01 point configuration dipshunt ***without*** strapping, and the digital signal path from the DSO module to the field device for a termination unit application. Refer to Table D-1 to determine the dipshunt strapping to configure your application. Figure D-2 shows the terminal assignment and polarity for each of the digital output signals. Refer to this figure when connecting field wiring to the NTDI01.

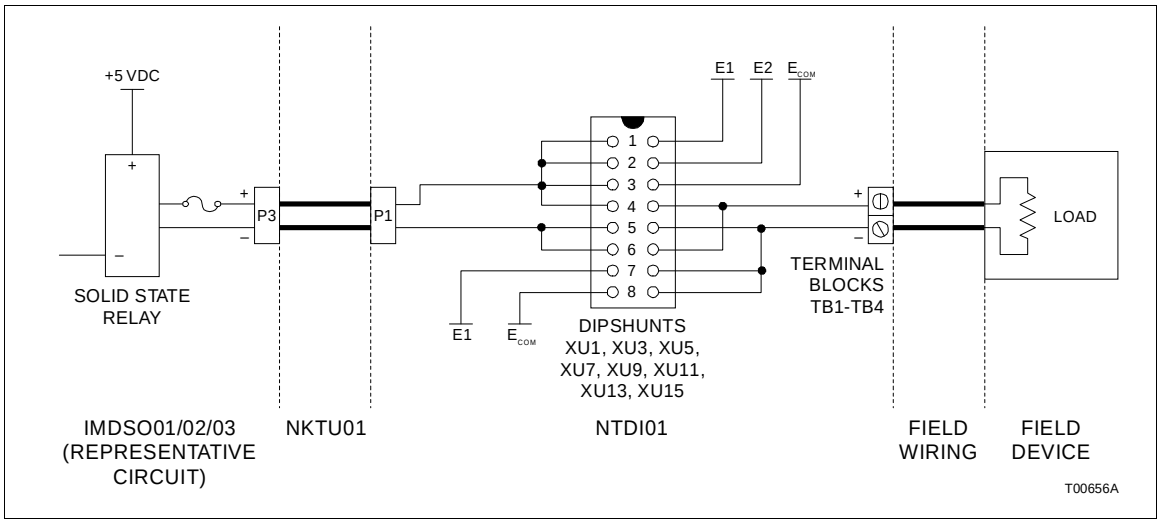

Figure D-1. NTDI01 to IMDSO01/02/03 Diagram

Table D-1. NTDI01 with IMDSO01/02/03Dipshunt Configuration

Application/Signal Type	Dipshunt Configuration XU1, 3, 5, 7, 9, 11, 13, 15
Externally Powered	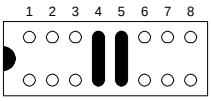
System Powered from E1	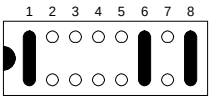
System Powered from E2	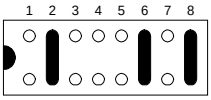 T00657A

NOTES:
1. XU17 does not require a dipshunt for this application.
2. Care must be taken when powering solid state relay loads through the E1 and E2 connectors. The traces on the termination unit allow for two amperes for all outputs driven from either E1 or E2. Exceeding this current can damage the termination unit printed circuit board. Where higher current is required, use the externally powered configuration.

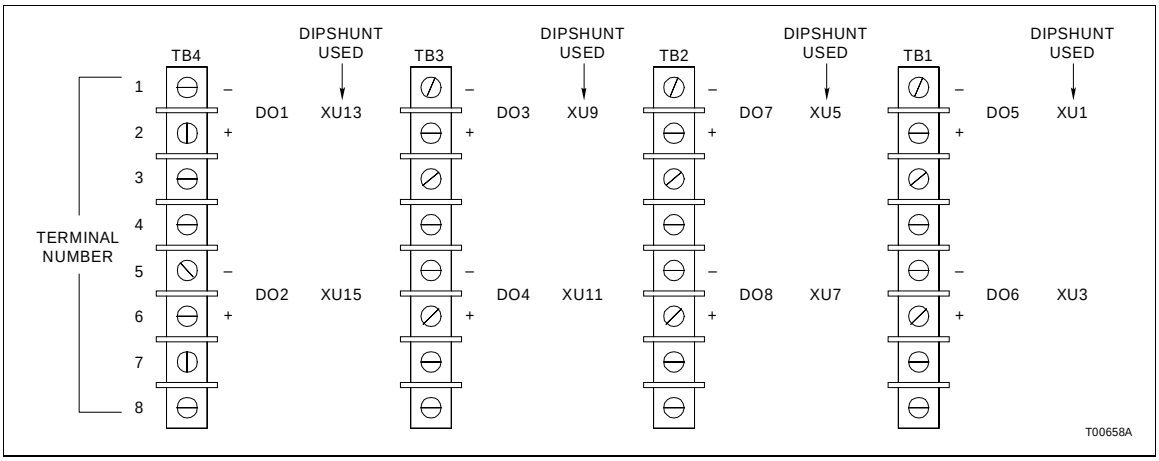

NOTE: DO = Digital Output

Figure D-2. NTDI01 with IMDSO01/02/03 Terminal Assignments

APPENDIX E - DIGITAL SLAVE OUTPUT MODULE (IMDSO04)

INTRODUCTION

The IMDSO04 uses an NTDI01 for termination. Dipshunts on the termination unit configure the digital outputs that are sent to the process. The Digital Slave Output (DSO) module can switch a voltage of 24 VDC at 250 mA.

Figure E-1 shows an NTDI01 point configuration dipshunt ***without*** strapping, and the digital signal path from the DSO module to the field device for a termination unit application. Refer to Table E-1 to determine the dipshunt strapping to configure your application. Figure E-2 shows the terminal assignment and polarity for each of the digital output signals. Refer to this figure when connecting field wiring to the NTDI01.

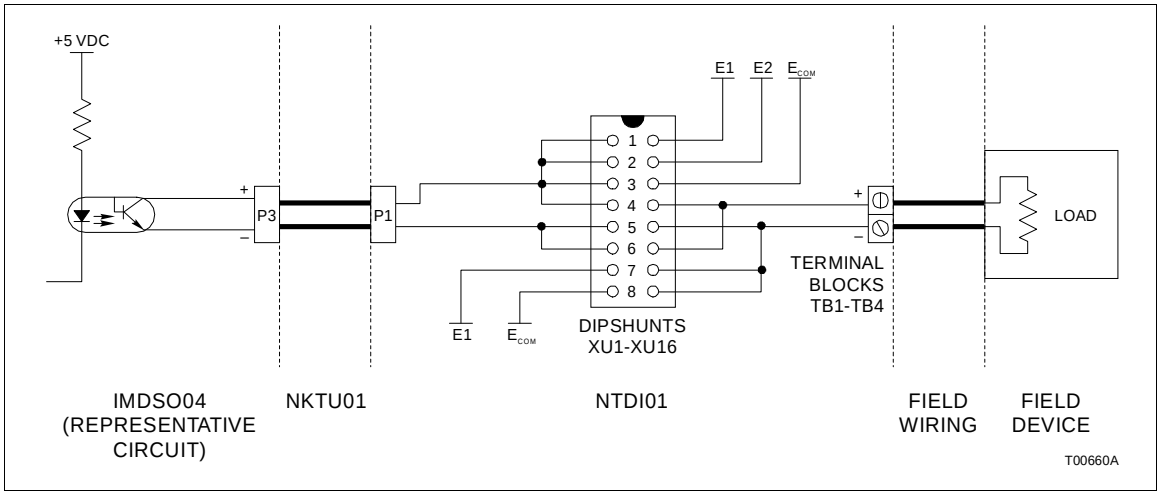

Figure E-1. NTDI01 to IMDSO04 Diagram

Table E-1. NTDI01 with IMDSO04 Dipshunt Configuration

Application/Signal Type	Dipshunt Configuration
Externally Powered	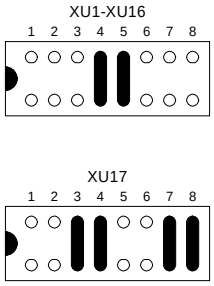
System Powered from E1	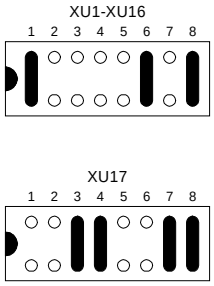
System Powered from E2	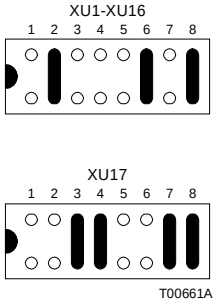

NOTE:
1. XU17 does not require a dipshunt for this application.
2. Care must be taken when powering solid state relay loads through the E1 and E2 connectors. The traces on the termination unit allow for two amperes for all outputs driven from either E1 or E2. Exceeding this current can damage the termination unit printed circuit board. Where higher current is required, use the externally powered configuration.

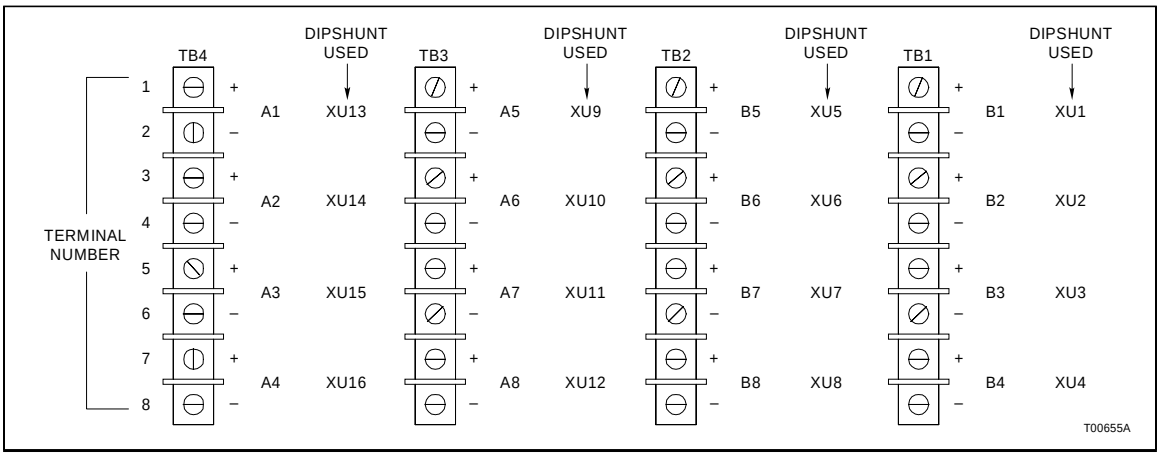

NOTE: DO = Digital Output

Figure E-2. NTDI01 With IMDSO04 Terminal Assignments

APPENDIX F - PULSE INPUT SLAVE MODULE (IMDSM04)

INRODUCTION

The IMDSM04 uses an NTDI01 for termination. Dipshunts on the termination unit configure the digital inputs from the process. The pulse input slave module can input pulsed voltages of 50 mV (p-p) to 10 mV (p-p), 4 to 6 VDC or 21.6 to 27 VDC depending on the slave module configuration.

Figure F-1 shows an NTDI01 point configuration dipshunt ***without*** strapping, and the digital signal path from the field device to the IMDSM04 for a termination unit application. Refer to Table F-1 to determine the dipshunt strapping to configure your application. Figure F-2 shows the terminal assignment and polarity for each of the digital input signals. Refer to this figure when connecting field wiring to the NTDI01.

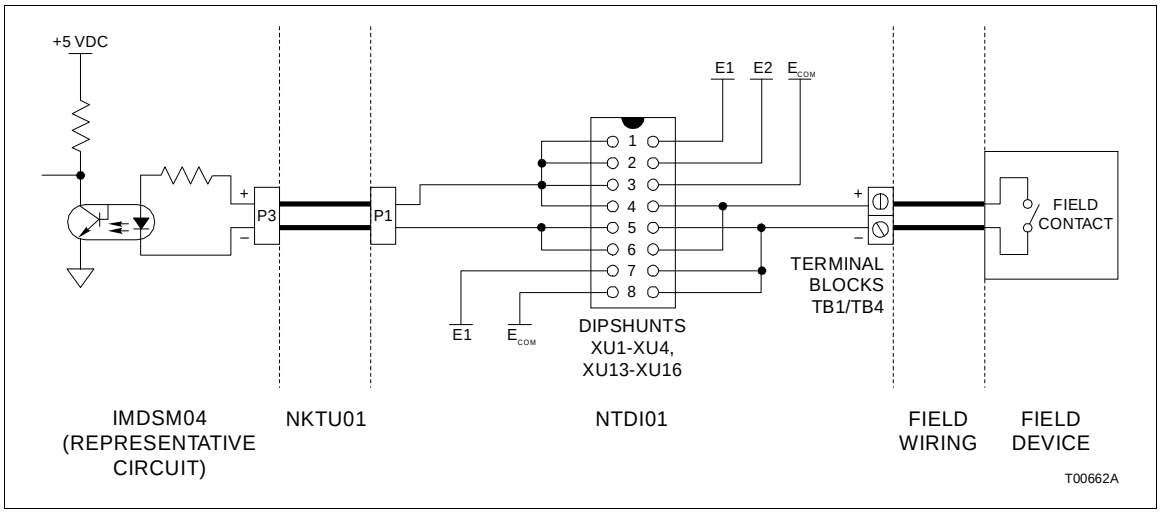

Figure F-1. NTDI01 to IMDSM04 Diagram

Table F-1. NTDI01 with IMDSM04 Dipshunt Configuration

Application/Signal Type	Dipshunt Configuration XU1-XU4, X13-X16	Dipshunt Configuration XU7
System Powered from E1	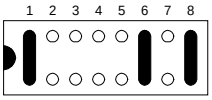	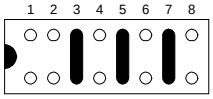
Field Powered Input	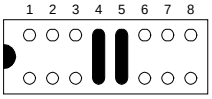	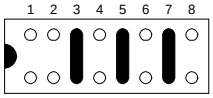 T00663A

NOTE: XU7, in this application, connects 24 VDC I/O power to the IMDSM04 preamplifiers. If the reamplifiers are not used, a dipshunt is not required for XU7.

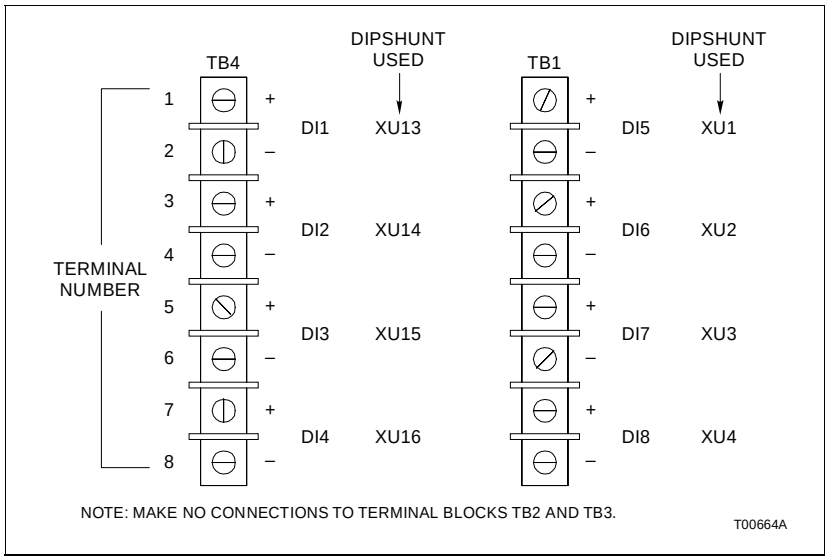

NOTE: DI=Digital Input

Figure F-2. NTDI01 with IMDSM04 Terminal Assignments

APPENDIX G - FREQUENCY COUNTER SLAVE MODULE (IMFCS01)

FREQUENCY COUNTER SLAVE MODULE (IMFCS01)

The IMFCS01 uses an NTDI01 for termination. Dipshunts on the termination unit configure a frequency input from the process. The Frequency Counter Slave (FCS) module can input a voltage of 300 mV (p-p) to 120 VAC at a frequency range from 1HZ to 12.5 KHZ.

Figure G-1 shows an NTDI01 point configuration dipshunt ***without*** strapping, and the signal path from the field device to the FCS for a termination unit application. Refer to Table G-1 to determine the dipshunt strapping to configure your application. Figure G-2 shows the terminal assignment and polarity for the input signal. Refer to this figure when connecting field wiring to the NTDI01.

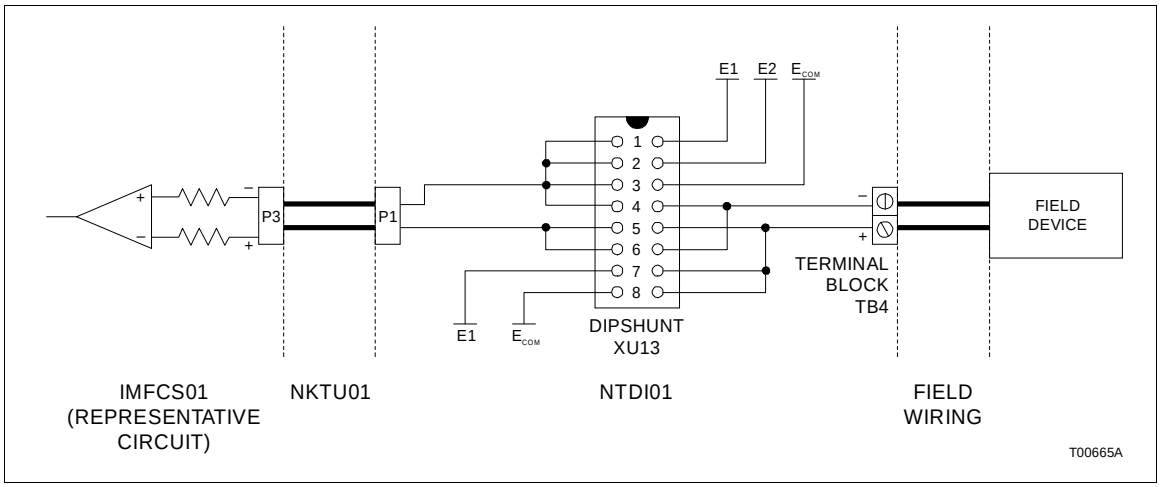

Figure G-1. NTDI01 to IMFCS01 Diagram

Table G-1. NTDI01 with IMFCS01 Dipshunt Configuration

Application/Signal Type	Dipshunt Configuration
Analog Inputs 0.3 Vp-p to 120 VAC	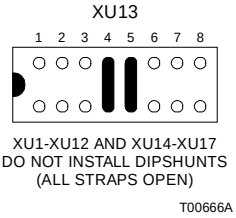

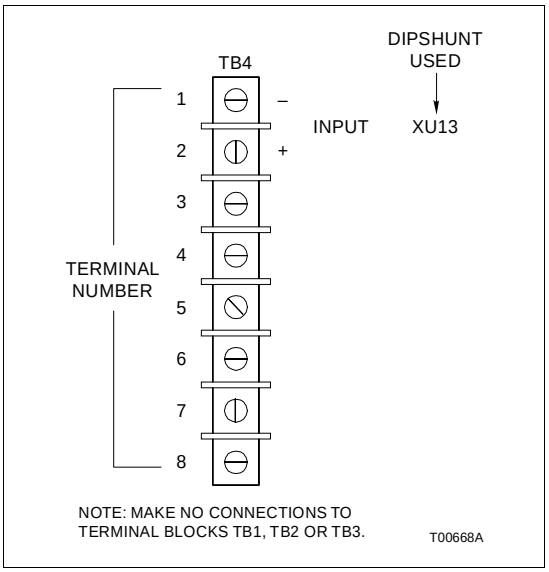

Figure G-2. NTDI01 With IMFCS01 Terminal Assignments

APPENDIX H - HYDRAULIC SERVO SLAVE MODULE (IMHSS01)

INTRODUCTION

The IMHSS01 uses an NTDI01 for termination. Dipshunts on the termination unit configure the I/O signals. The Hydraulic Servo Slave (HSS) module provides one digital and four analog outputs, and three digital and two analog inputs for control of hydraulic actuators.

Figure H-1, H-2, H-3 and H-4 show an NTDI01 point configuration dipshunt ***without*** strapping, and the signal path from the HSS to the field device for a termination unit application. Figure H-5 shows the terminal assignment and polarity for each of the I/O signals. Refer to this figure when connecting field wiring to the NTDI01. Refer to Table H-1 to determine the dipshunt strapping to configure your application.

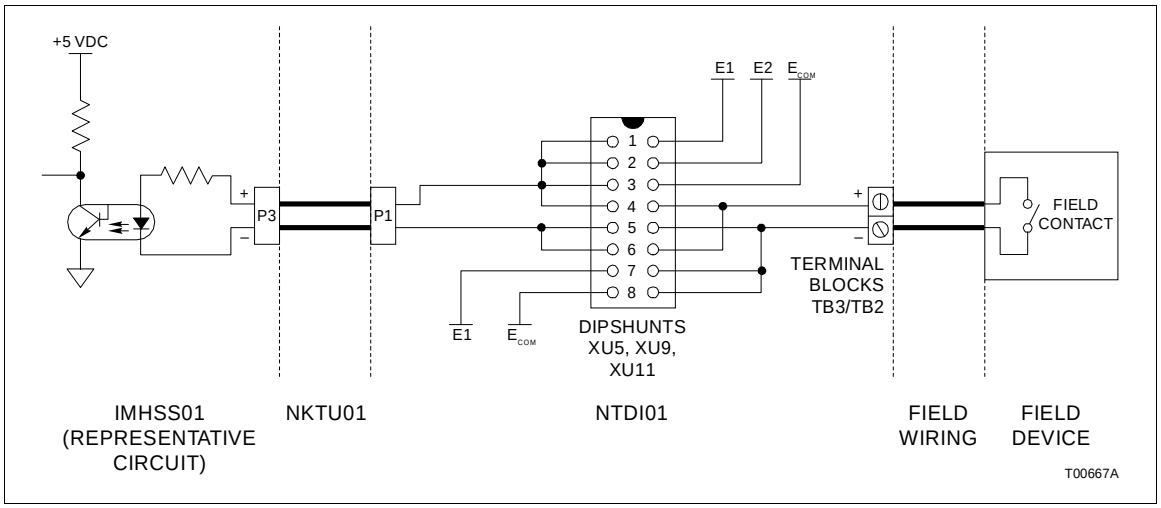

Figure H-1. NTDI01 to IMHSS01 Diagram (Digital Input

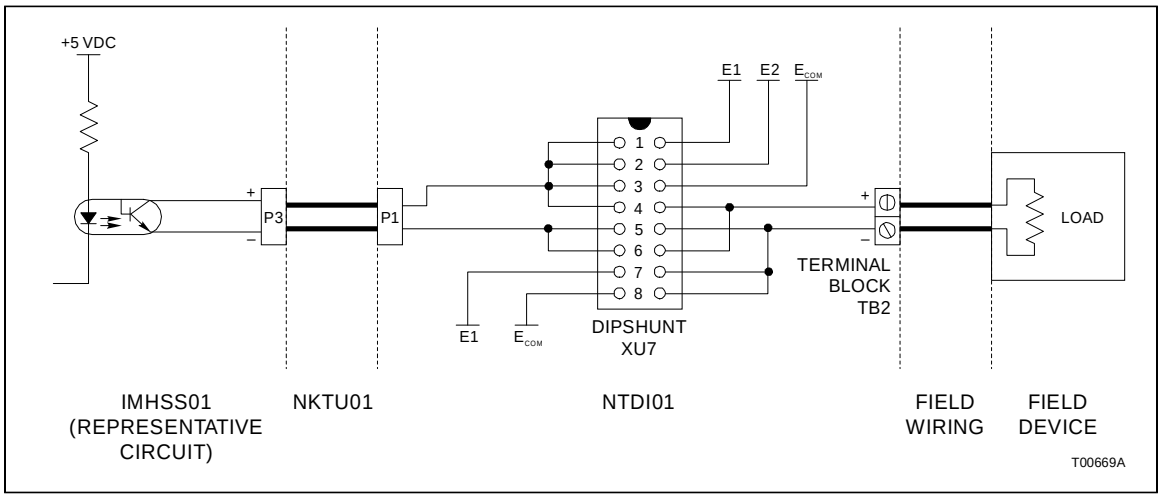

Figure H-2. NTDI01 to IMHSS01 Diagram (Digital Output)

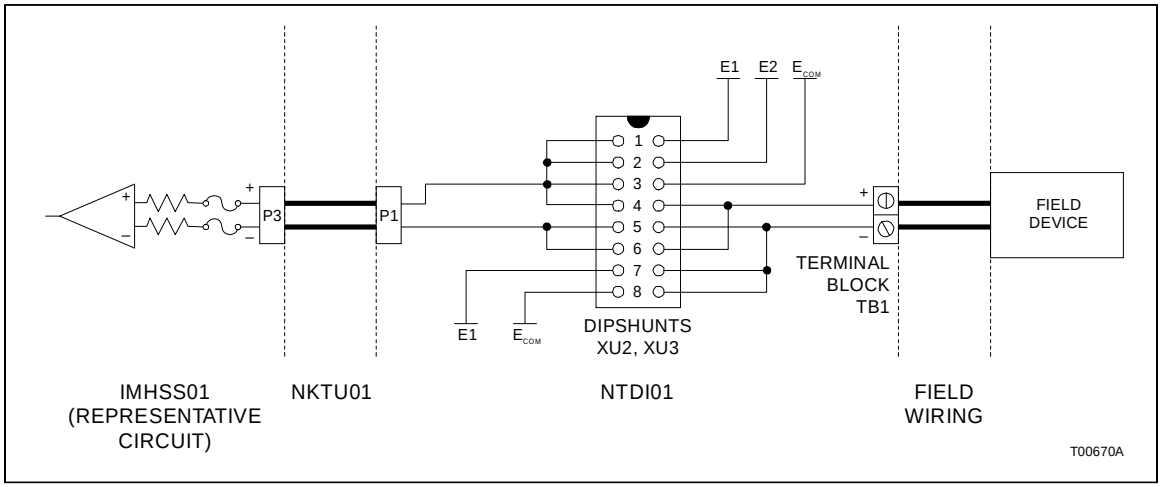

Figure H-3. NTDI01 to IMHSS01 Diagram (Analog Input)

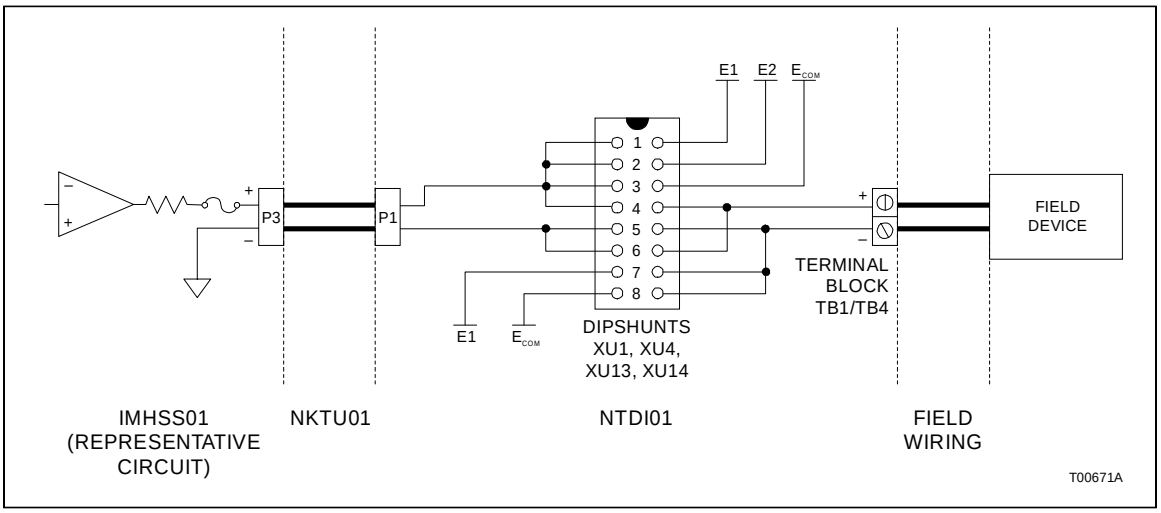

Figure H-4. NTDI01 to IMHSS01 Diagram (Analog Output)

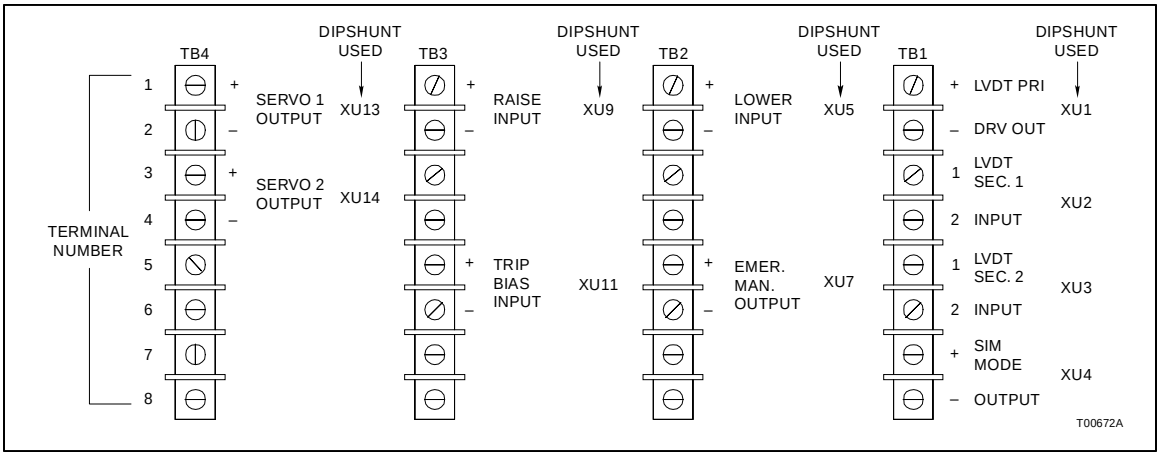

Figure H-5. NTDI01 with IMHSS01 Terminal Assignments

Table H-1. NTDI01 with IMHSS01 Dipshunt Configuration

Application/Signal Type	Dipshunt Configuration
All Types	XU17 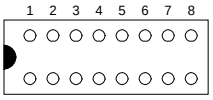
Analog Inputs LVDT Secondary 1 LVDT Secondary 2	XU2, XU3 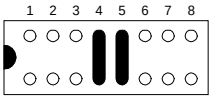
Analog Outputs LVDT Primary Drive Simulation Mode Servo 1 Drive Servo 2 Drive	XU1, XU4, XU13, XU14 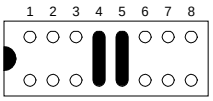
Digital Inputs Lower, Raise and Trip Bias 24 VDC Field Powered Contacts	XU1, XU4, XU13, XU14 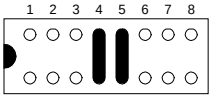
System Powered from E1 (24 VDC)	XU5, XU9, XU11 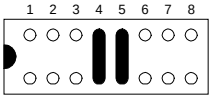
System Powered from E2 (24 VDC)	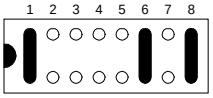
Digital Output Emergency Manual	XU5, XU9, XU11 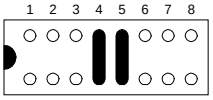
System Powered from E1 (24 VDC)	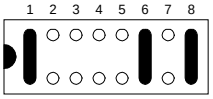
System Powered from E2(24 VDC)	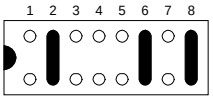 T00673A

APPENDIX I - LOGIC MASTER MODULE (IMLMM02)

INTRODUCTION

The IMLMM02 uses an NTDI01 for termination. Dipshunts on the termination unit configure the digital I/O signals. The sixteen Logic Master Module (LMM) I/O signals are divided into two groups of eight: group A for outputs and group B for inputs. LMM I/O voltages are 24 VDC (system powered or externally powered).

Figures I-1 and I-2 show an NTDI01 point configuration dipshunt ***without*** strapping, and the digital signal path from the LMM module to the field device for a termination unit application. Refer to Table I-1 to determine the dipshunt strapping to configure your application. Figure I-3 shows the terminal assignment and polarity for each of the digital I/O signals. Refer to this figure when connecting field wiring to the NTDI01.

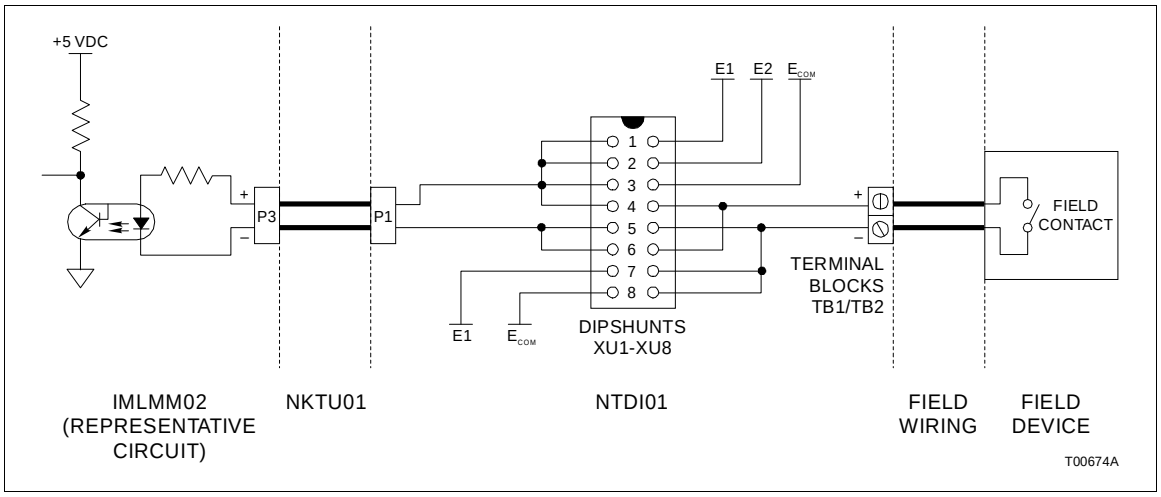

Figure I-1. NTDI01 to IMLMM02 Diagram (Digital Input)

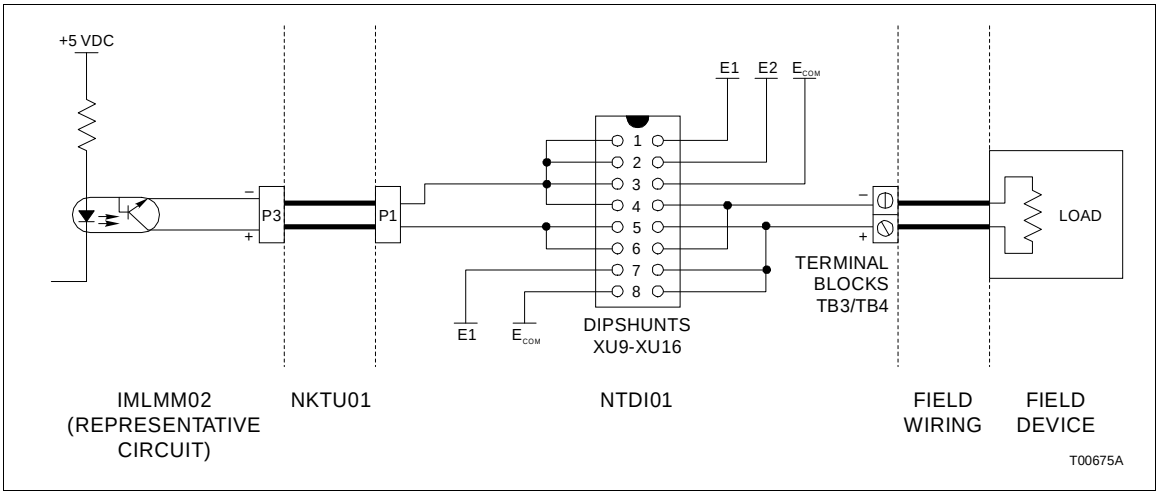

Figure I-2. NTDI01 to IMLMM02 Diagram (Digital Output)

Table I-1. NTDI01 with IMLMM02 Dipshunt Configuration

Outputs		Inputs	
Application/Signal Type	**Dipshunt Configuration**	**Application/Signal Type**	**Dipshunt Configuration**
Isolated Output/Field Powered Output	XU9-XU16 1 2 3 4 5 6 7 8 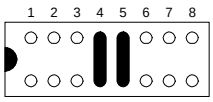	Field Powered Input	XU1-XU8 1 2 3 4 5 6 7 8 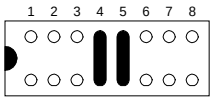
Powering an External Load	XU9-XU16 1 2 3 4 5 6 7 8 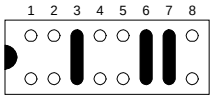	Input Powered from E1	XU1-XU8 1 2 3 4 5 6 7 8 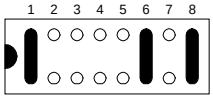
Sinking an External Load	XU9-XU16 1 2 3 4 5 6 7 8 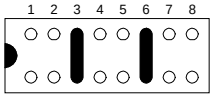	Input Powered from E2	XU1-XU8 1 2 3 4 5 6 7 8 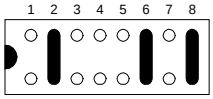
All	XU17 1 2 3 4 5 6 7 8 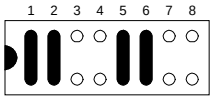	All	XU17 1 2 3 4 5 6 7 8 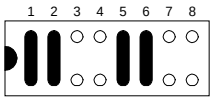 T00676A

NOTES:
1. When using the Field Powered Input, Isolated Output or Field Powered Output configurations, some of the I/O points are connected internally on the termination unit: A5(-) and A6(-), A7(-) and A8(-), B5(-) and B6(-), and B7(-) and B8(-).
2. When using the Powering An External Load configuration, all positive connection points are internally wired on the termination unit to the +24 VDC I/O power.

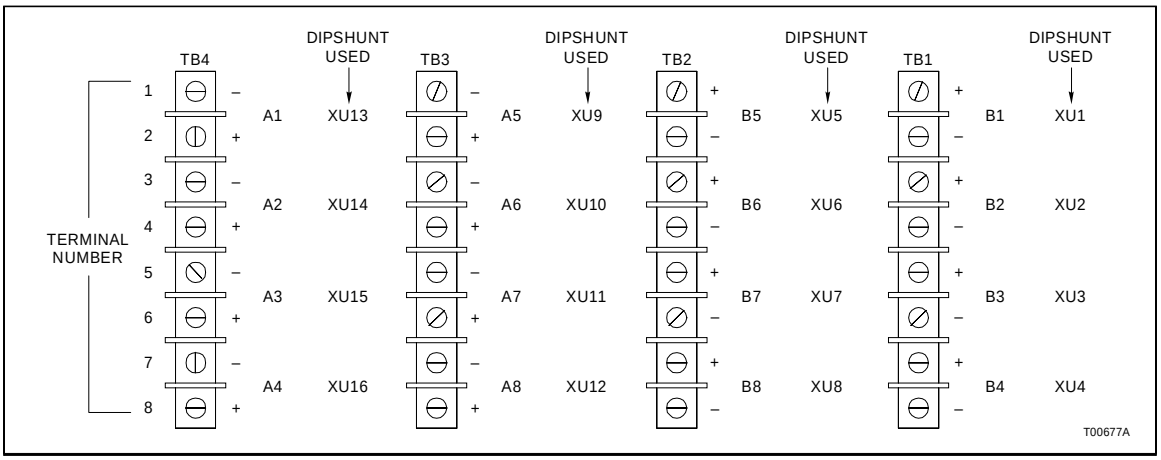

NOTES:
1. When using the Sinking An External Load configuration, make external connections to the positive terminals only.
2. When using the System Powered Input from E1/E2 configuration, the polarities indicated in Figure I-3 for TB1 and TB2 should be reversed.

Figure I-3. NTDI01 with IMLMM02 Terminal Assignments

Visit Elsag Bailey on the World Wide Web at http://www.bailey.com

Our worldwide staff of professionals is ready to meet *your* needs for process automation.
For the location nearest you, please contact the appropriate regional office.

AMERICAS
29801 Euclid Avenue
Wickliffe, Ohio USA 44092
Telephone 1-216-585-8500
Telefax 1-216-585-8756

ASIA/PACIFIC
152 Beach Road
Gateway East #20-04
Singapore 189721
Telephone 65-391-0800
Telefax 65-292-9011

EUROPE, AFRICA, MIDDLE EAST
Via Puccini 2
16154 Genoa, Italy
Telephone 39-10-6582-943
Telefax 39-10-6582-941

GERMANY
Graefstrasse 97
D-60487 Frankfurt Main
Germany
Telephone 49-69-799-0
Telefax 49-69-799-2406

Form I-E96-424A Litho in U.S.A. 791

Copyright © 1991 by Elsag Bailey Process Automation, As An Unpublished Work
® Registered Trademark of Elsag Bailey Process Automation
™ Trademark of Elsag Bailey Process Automation